SCALE: 1/16"=1'-0" | SCALE: 1/8"=1'-0" | SCALE: 1/4"=1'-0" | SCALE: 1/2"=1'-0" | SCALE: 3/4"=1'-0" | SCALE: 1"=1'-0" | SCALE: 1-1/2"=1'-0" | SCALE: 3"=1'-0"

IF THIS SHEET IS NOT 24" X 36", IT IS A REDUCED PRINT. SCALE ACCORDINGLY

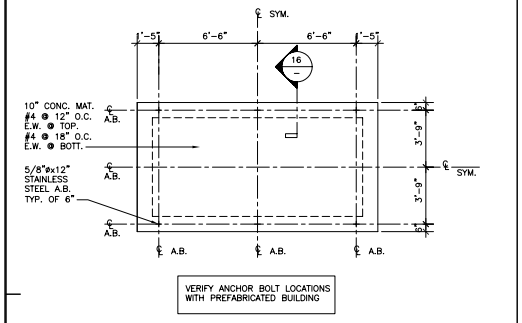

24 PLAN @ SLAB

1/4"=1'-0"

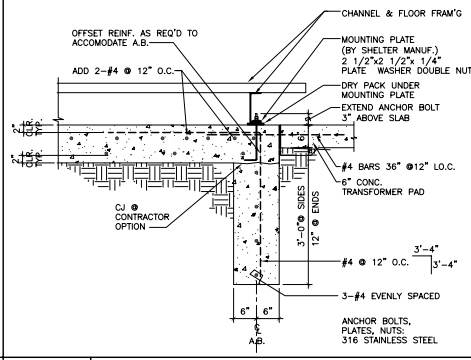

16 SECTION @ SLAB EDGE

3/4"=1'-0"

GENERAL NOTES:

1. POWER AND DATA TRENCH: 12"x30" SEPARATE CONDUITS
2. BUILDING WILL ANCHORED TO 10'x16' CONC. PAD
3. PAD AREA WILL BE LEVELED. NOT MORE THAN 4"-6"
4. NO OTHER GRADING OR FILL REQUIRED
5. FINISH FLOOR OF STATION WILL BE 11" ABOVE CONC. SLAB, WHICH IS 2" ABOVE FINISH GRADE
6. ELECTRICAL TRANSFORMER TO BE SET ON 3'x4' PAD (ESTIMATED SIZE)
7. Fire Supression System:

   Provide and install an FM-200 based clean agent fire extinguishing system including cylinders, piping, nozzels, supports and anchorage. Entire assembly to be mounted within enclosure. System to include alarm devices, control panel, smoke and flame detectors, discharge and abort switches. System to interlock with air handling unit to shut down units prior to discharge. System to be monitored by alarm system, and shall signal on smoke detection and agent release.
8. OCCUPANCY: S-2
9. CONSTRUCTION TYPE: V-N

LEGEND:

1. PREFABRICATED MARS SHORE STATION SEE VP1
2. ENTRY HOLE VAULT 8'x8'
3. ELECTRICAL TRANSFORMER
4. (E) POWER POLE W/ POLE MOUNTED BREAKER PANEL
5. (E) POWER POLE
6. POWER & DATA TRENCH
7. CABLE BORING
8. CABLE TRENCH: VAULT TO STATION
9. COMMUNICATION PULL BOX
10. 3" CONDUIT UNDERGROUND COMMUNICATION
11. NEW PULL BOX POINT OF CONNECTION TO (E) COMMUNICATIONS
12. EXISTING 3" COMMUNICATIONS CONDUIT
13. NEW PULL BOX
14. SAWCUT EXISTING CONC. FLOOR SLAB OR CORE UNDER FOR NEW CONDUIT
15. TERMINATE CONDUIT INTERIOR BLDG. "D" INTO MARS OPERATION LAB

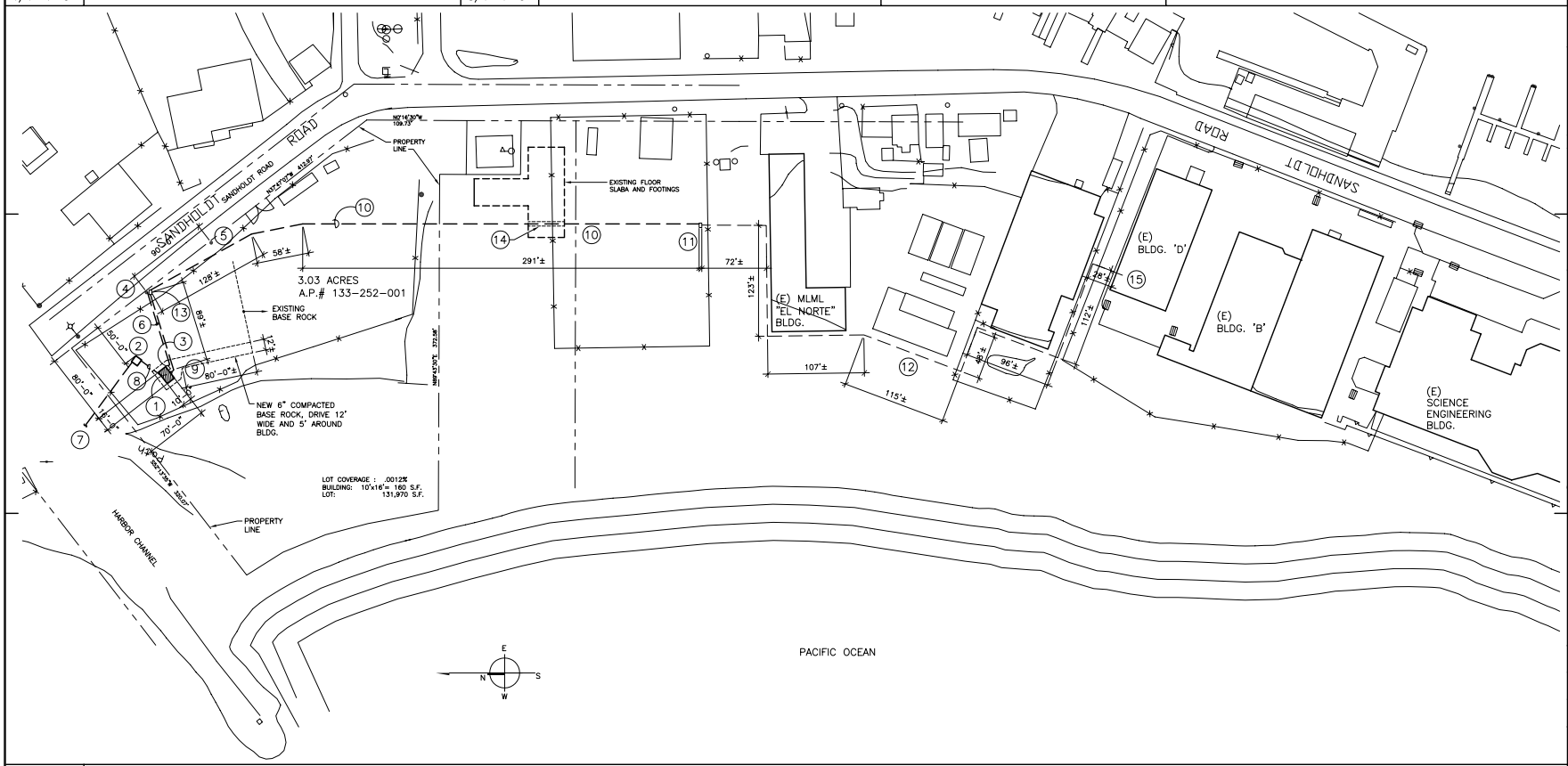

36 SITE PLAN

60'=1'-0"

HBFL
Holewinski Blevens Fedelem & Lukes, Architects

380 Main Street
Salinas, California 93901
831/ 757-8001

Richard J. Fedelem C12691
Thomas R. Lukes C8982

Consultants:

Agency Approvals:

Revisions

No.	Description	Date
1	OWNER REVISIONS	10/12/05

MBARI

MOSS LANDING FACILITIES
SANDHOLDT ROAD
MOSS LANDING CA. 95039

MARS SHORE STATION

SITE PLAN & DETAILS

Drawn by:

Checked:

Approved:

Project No. 04010

Date: 8/11/05

Drawing No. A2

THE USE OF THESE PLANS AND SPECIFICATIONS SHALL BE RESTRICTED TO THE ORIGINAL SITE FOR WHICH THEY WERE PREPARED AND PUBLICATION THEREOF IS EXPRESSLY LIMITED TO SUCH USE, RE-USE, REPRODUCTION, OR PUBLICATION BY ANY METHOD, IN WHOLE OR IN PART, IS PROHIBITED. TITLE TO THE PLANS AND SPECIFICATIONS REMAINS IN THE ARCHITECT WITHOUT PREJUDICE VISUAL CONTACT WITH THESE PLANS AND SPECIFICATIONS SHALL CONSTITUTE PRIMA FACIE EVIDENCE OF THE ACCEPTANCE OF THESE RESTRICTIONS.