0 4 8 16 32 ft SCALE: 1/16"=1'-0" | 0 2 4 8 16 ft SCALE: 1/8"=1'-0" | 0 1 2 4 8 ft SCALE: 1/4"=1'-0" | 0' 1' 2' 3' 6' SCALE: 1/2"=1'-0" | 0' 1' 2' 4' SCALE: 3/4"=1'-0" | 0' 1' 2' 3' SCALE: 1"=1'-0" | 0' 1' 2' SCALE: 1-1/2"=1'-0" | 0' 1' SCALE: 3"=1'-0"

IF THIS SHEET IS NOT 24" X 36". IT IS A REDUCED PRINT. SCALE ACCORDINGLY

LIGHT FIXTURE SCHEDULE

FIXTURE NOTES:

1. ALL FLUORESCENT LIGHT FIXTURE BALLASTS SHALL BE ELECTRONIC TYPE, 10% TOTAL HARMONIC DISTORTION MAX., "ADVANCE" MAGNETEK/UNIVERSAL, OR "MOTOROLA" U.O.N.
2. ALL FLUORESCENT LIGHT FIXTURE LAMPS SHALL BE ENERGY SAVING 3500° K, 80 CRI MINIMUM, U.O.N.
3. ALL FLUORESCENT BALLASTS (AND ASSOC. FIXTS.) SHALL HAVE MANUFACTURER'S CERTIFICATION OF COMPLIANCE WITH CALIFORNIA ENERGY COMMISSION STANDARDS AND REQUIREMENTS, WHERE SUCH ARE USED IN CONDITIONED SPACES.

TYPE	DESCRIPTION	LAMPS	MANUFACTURER
A	8' LONG x 7" W x 5 7/8" D. SURFACE MOUNTED ACRYLIC WRAPAROUND LENS FLUORESCENT FIXTURE, ELECTRONIC BALLAST, 120V.	(2) F32 T8	DAY-BRITE TV2
B	12 1/2" H x 7 1/4" D. WALL MTD NON-METALLIC, VAPORTIGHT FLUORESCENT FIXTURE, PRISMATIC SMOOTH POLY-CARBONATE GLOBE, NON METALLIC GUARD, HPF BALLAST, GREY COLOR. 120V	(1) 26W PL	CANLET IFWF26H16-PSCP120V

ELECTRICAL SYMBOLS

SYMBOLS & ABBREVIATIONS SHOWN ARE FOR GENERAL USE DISREGARD THOSE WHICH DO NOT APPEAR ON THE PLANS.

- FLUORESCENT LUMINAIRE - SEE SCHEDULE.
- LUMINAIRE - WALL MOUNTED SEE SCHEDULE.
- SINGLE POLE SWITCH, + 48" AFF UON.
- SINGLE POLE SWITCH, + 48" AFF UON, a = CIRCUIT CONTROLLED.
- CONVENIENCE RECEPTACLE - DUPLEX AT + 18" AFF UON.
- PANELBOARD - SURFACE MOUNTED.
- EQUIPMENT PANEL - SURFACE MOUNTED
- NON-FUSED DISCONNECT SWITCH
- CIRCUIT BREAKER.
- TRANSFORMER - SEE SINGLE LINE FOR SIZE.
- PULLBOX
- FIRE ALARM MANUAL PULL STATION
- WEATHERPROOF FIRE ALARM HORN
- PHOTOELECTRIC SMOKE DETECTOR
- FLEX CONDUIT WITH CONNECTION.
- CONDUIT - UP.
- CONDUIT - DOWN.
- CONDUIT - CONCEALED IN WALLS OR CEILING.
- CONDUIT - IN OR BELOW SLAB OR UNDERGROUND: 3/4"MIN.
- CAPPED CONDUIT. STUB-OUT
- CONDUIT CONTINUATION.
- CONDUIT - HOME RUN TO PANEL, TERMINAL CABINET, ETC. RUNS MARKED WITH CROSSHATCHES INDICATE NUMBER OF #12 AWG WIRES. WHEN MORE THAN TWO. SIZE CONDUIT ACCORDING TO SPECIFICATIONS AND APPLICABLE CODE. CROSS HATCHES WITH NUMBER ADJACENT INDICATES WIRE SIZE OTHER THAN #12AWG.
- SHEET NOTE REFERENCE SYMBOL; SEE ASSOCIATED NOTE ON SAME SHEET.
- DETAIL OR SECTION DESIGNATION.

ABBREVIATIONS

A	AMPERE	LTG	LIGHTING
AFF	ABOVE FINISHED FLOOR	LV	LOW VOLTAGE
ARCH.	ARCHITECT	MCM	THOUSAND CIRCULAR MILS
AWG	AMERICAN WIRE GAUGE	MH	MANHOLE
BKR	BREAKER	MLO	MAIN LUGS ONLY
C	CONDUIT	MECH.	MECHANICAL
CB	CIRCUIT BREAKER	MTD	MOUNTED
CIRC.	CIRCULATION	MTG	MOUNTING
CKT	CIRCUIT	(N)	NEW
CL	CENTER LINE	NIC	NOT IN CONTRACT
CLG	CEILING	NIEC	NOT IN ELECTRICAL CONTRACT
CO	CONDUIT ONLY	NL	NIGHT LIGHT
CTR	CENTER	NO.	NUMBER
DIM	DIMENSION	NTS	NOT TO SCALE
DISTR	DISTRIBUTION	OC	ON CENTER
(E)	EXISTING	OH	OVERHEAD
EM	EMERGENCY	PA	PUBLIC ADDRESS
EMT	ELECTRICAL METALLIC TUBING	PB	PULL BOX
EQUIP	EQUIPMENT	PF	POWER FACTOR OR Ø PHASE
FA	FIRE ALARM	PNL	PANEL
FACP	FIRE ALARM CONTROL PANEL	PVC	POLY VINYL CHLORIDE
FIN	FINISH	(R)	EXISTING TO BE REMOVED
FL	FLOOR	(RP)	REMOVABLE POLE
(F)	FUTURE	RECPT'S	RECEPTACLES
GFIC	GROUND FAULT INTERRUPTING	REQD	REQUIRED
GND/G	GROUND	REQMT'S	REQUIREMENT(S)
GRS	GALVANIZED RIGID STEEL	SHT	SHEET
HT.	HEIGHT	SW	SWITCH
IC	INTERCOM	SWBD	SWITCHBOARD
JB	JUNCTION BOX	TYP	TYPICAL
KV	KILOVOLT	UON	UNLESS OTHERWISE
KVA	KILOVOLT AMPERES	V	NOTED
KW	KILOWATT	W	VOLT
LCP	LIGHTING CONTROL PANEL		WATT
		W/	WITH
		WP	WEATHERPROOF
		XFMR	TRANSFORMER

(1) TRANSFORMER SHALL HAVE COPPER WINDINGS & PREMIUM PAINT SYSTEM.

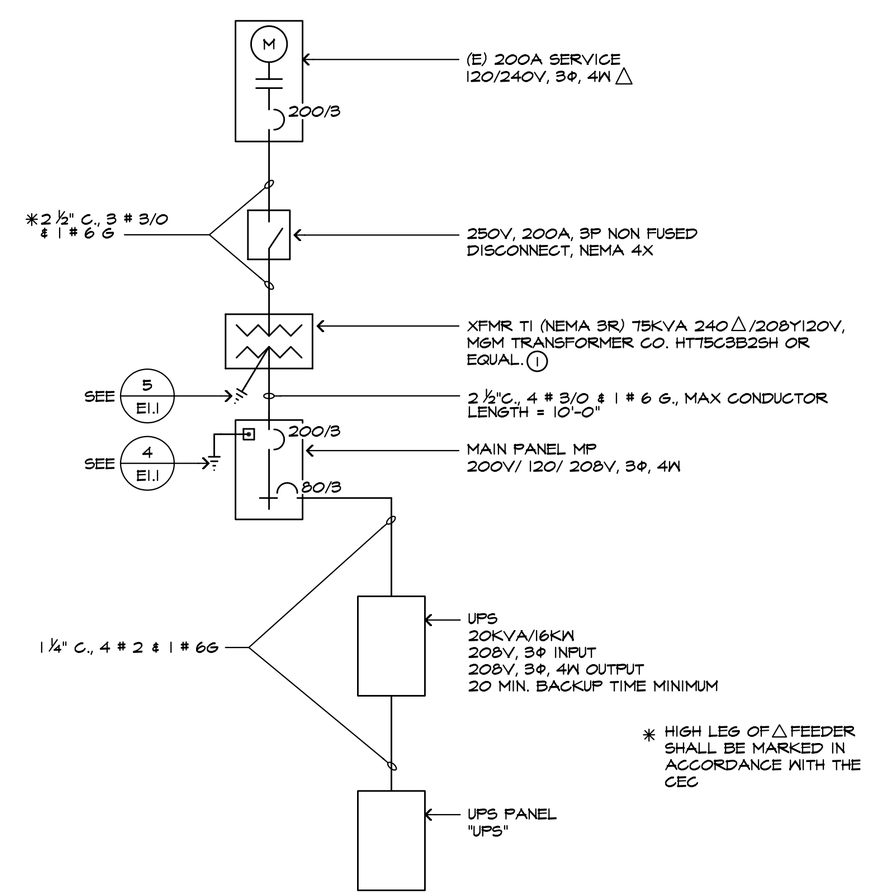

1 SINGLE LINE DIAGRAM

NO SCALE

* DATA CONDUITS @ 18". PROVIDE PULLBOX EXTENSIONS AS REQUIRED

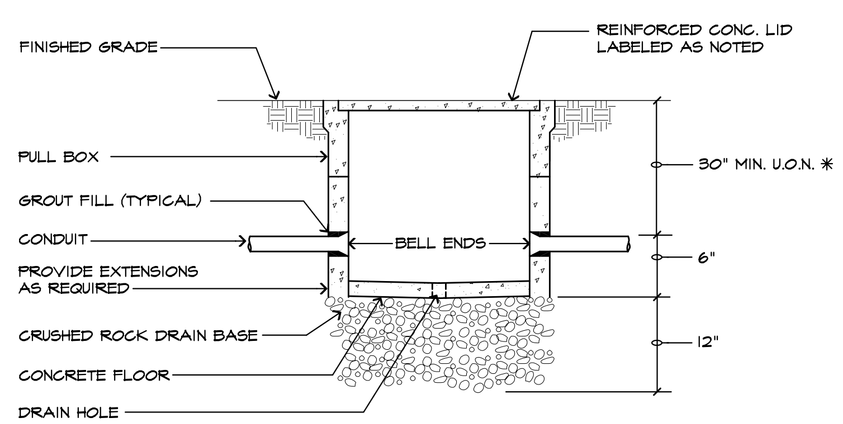

NOTE:
SIZE & MFGR. AS NOTED

2 TYPICAL PULLBOX DETAIL

NO SCALE

SEQUENCE OF OPERATION OF THE FIRE ALARM SYSTEM.

1. ACTIVATION OF ANY INITIATING DEVICE SHALL CAUSE ALL SIGNALS IN BUILDING TO ACTIVATE AND SOUND AND SIMULTANEOUSLY CAUSE AN ALARM TO BE SENT TO THE REMOTE MONITORING AGENCY.
2. IN ADDITION, THE ALARM LIGHT ON THE FIRE ALARM CONTROL PANEL CORRESPONDING TO THE ZONE IN ALARM WILL ILLUMINATE.
3. SHOULD AN OPEN, GROUND OR SHORT OCCUR IN THE WIRING SYSTEM, PANEL WILL DETECT THE MALFUNCTION AND INITIATE A TROUBLE INDICATOR ALONG WITH THE SPECIFIC ZONE TROUBLE LIGHT WILL ILLUMINATE.
4. ONCE THE SYSTEM IS BACK TO NORMAL. THE PANEL WILL RESOUND FOR PROPER RESETTING.

FIRE ALARM NOTES:

(1) FIRE ALARM CONTROL PANEL, WITH COMMUNICATOR, CHARGER & BATTERIES

(2) ALL WIRE SHALL BE MINIMUM #12AWG. ALL WIRING SHALL BE ROUTED IN SURFACE METAL RACEWAY OR CONDUIT.

(3) SUBMIT COMPLETE FIRE ALARM SYSTEM PLANS INCLUDING, RISER DIAGRAMS, BATTERY CALCS, VOLT DROP CALCS, WIRING DIAGRAMS, ETC. TO LOCAL FIRE AUTHORITY REVIEW AND APPROVAL PRIOR TO START OF INSTALLATION.

(4) FINAL CONNECTIONS OF DEVICES AND EQUIPMENT SHALL BE BY A FIRE ALARM CONTRACTOR WHO PERFORMS SUCH WORK ON A REGULAR BASIS.

(5) PROVIDE MANUALS AND MINIMUM 2-HOURS OPERATING INSTRUCTION TO OWNER.

(6) PROVIDE BATTERY BACKUP FOR 60 HOURS OF STANDBY & 5 MINUTES OF ALARM.

(7) MECHANICAL SENSING DEVICE FOR HEAT PUMP/TEMPERATURE MONITORING. SEE MECHANICAL DRAWINGS

(8) POWER FAILURE MONITORING C.T.'S ON INCOMING FEEDER & RELAY.

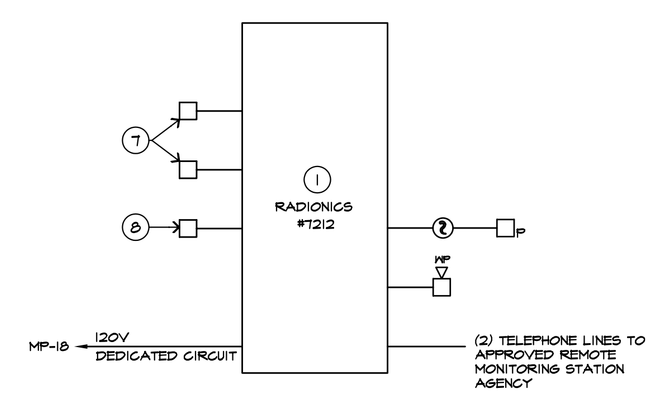

* SEE PLANS FOR QUANTITIES AND LOCATION.

3 TYPICAL FIRE ALARM RISER DIAGRAM

NO SCALE

PLAN CHECK SUBMITTAL

LICENSED PROFESSIONAL ENGINEER PAUL L. PETERSON No. 11781 EXP. 9/30/06 ELECTRICAL STATE OF CALIFORNIA

AURUM CONSULTING ENGINEERS
MONTEREY BAY, INC.
Project No. 25092.00
1900 Garden Road • Suite 120 • Monterey, CA 93940
T.831.646.3330 • F.831.646.3336 • cadd@acemb.com

HBFL
Holewinski Blevens Fedelem & Lukes, Architects

380 Main Street
Salinas, California 93901
408/ 757-8001

LICENSED ARCHITECT RICHARD JOE FEDELEM No. C-12691 REN. 03-31-07 STATE OF CALIFORNIA

Richard J. Fedelem C12691
Thomas R. Lukes C8982

Consultants:

Agency Approvals:

Revisions

No.	Description	Date
	OWNER'S REVISIONS	10-12-05

M B A R I

MOSS LANDING FACILITIES
SANDHOLDT ROAD
MOSS LANDING CA. 95039

MARS SHORE STATION

SINGLE LINE DIAGRAM & LIGHT FIXTURE SCHEDULE

Drawn by: CADD

Checked: E.B.S.

Approved:

Project No. 04010

Date: 8/11/05

Drawing No. E0.1

THE USE OF THESE PLANS AND SPECIFICATIONS SHALL BE RESTRICTED TO THE ORIGINAL SITE FOR WHICH THEY WERE PREPARED AND PUBLICATION THEREOF IS EXPRESSLY LIMITED TO SUCH USE, RE-USE, REPRODUCTION, OR PUBLICATION BY ANY METHOD, IN WHOLE OR IN PART, IS PROHIBITED. TITLE TO THE PLANS AND SPECIFICATIONS REMAINS IN THE ARCHITECT WITHOUT PREJUDICE VISUAL CONTACT WITH THESE PLANS AND SPECIFICATIONS SHALL CONSTITUTE PRIMA FACIE EVIDENCE OF THE ACCEPTANCE OF THESE RESTRICTIONS.

G:\Projects\25Jobs\25092.00 MBARI Mars Project\Dwgs01\25092E0.1.dwg, 11/9/2005 4:10:58 PM, Fabian,
Aurum Consulting Engineers - Monterey Bay