NOTES:

REVISION HISTORY				
REV	DWN	APPR	DESCRIPTION	DATE
A	L J	J L	CABLE, ITEM 4, WAS P/N FM022208-11; CONNECTOR, ITEM 2 WAS P/N DIL13F; OVERMOLD, ITEM 5, ADDED;	16 NOV 17

ITEM NO.	STOCK	PART #	TITLE	SUPPLIER	QTY.	UNITS
1	TBD	12ROV-CEP45	CONNECTOR, 12 WAY FLYING ROV PLUG (PINS)	TELEDYNE ODI	1	EA
2	94-410-026	DOM13F	CONNECTOR, 13 PIN w_ETHERNET CIRCULAR, OVERMOLD, FEMALE	SUBCONN	1	EA
3	94-440-006	DLSA-M	LOCKING SLEEVE, MALE	SUBCONN	1	EA
4	TBD	FM022208-10	CABLE, 4 TP, 23 AWG, 4C 20 AWG, PU JACKET	FALMAT	AR	M
5	TBD	OMBA	OVERMOLD	SUBCONN	1	EA

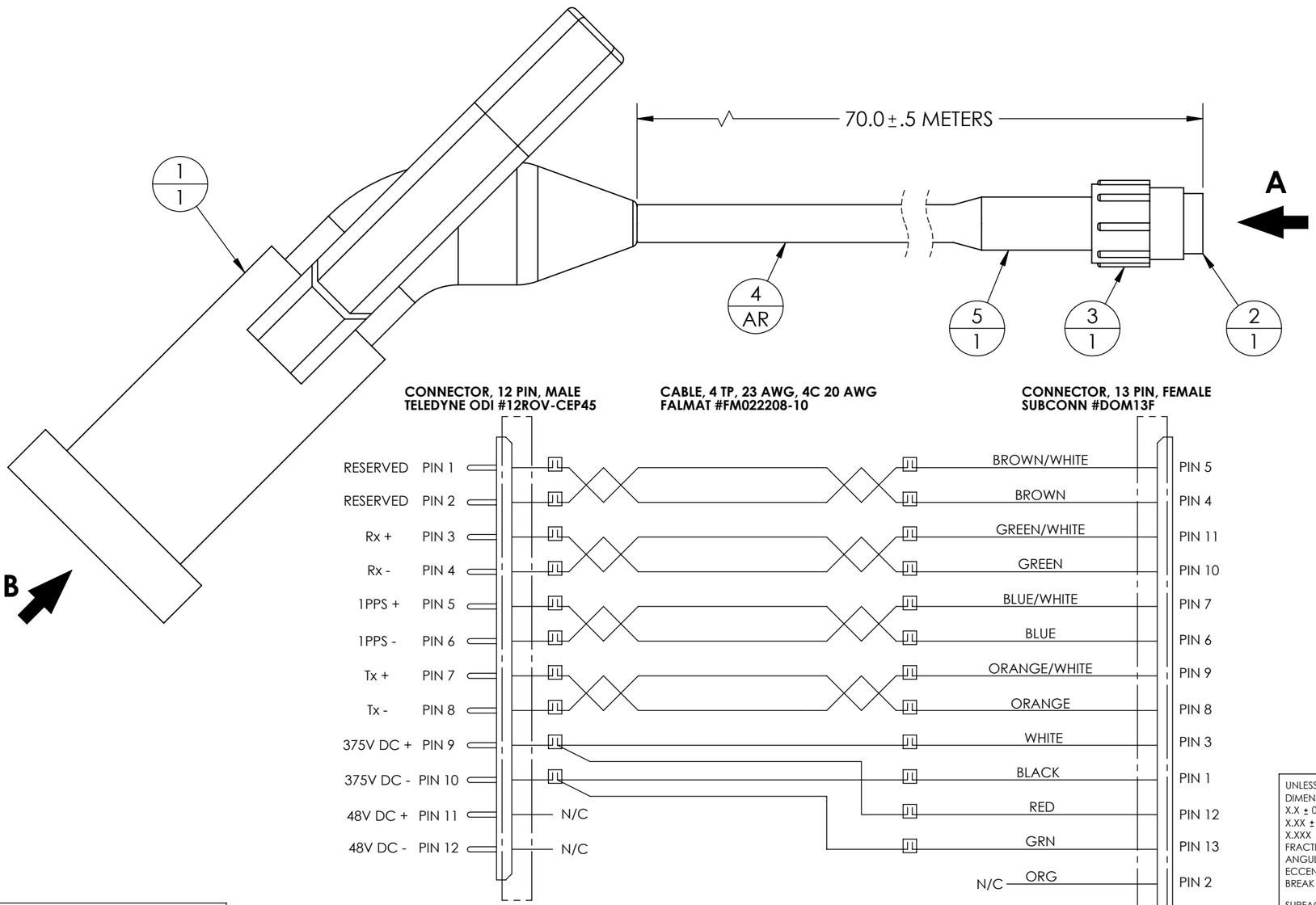

INTERCONNECTION DIAGRAM

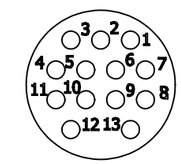

VIEW ON ARROW A

SCALE 1:1

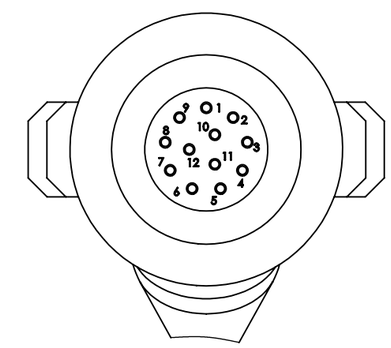

VIEW ON ARROW B

ROTATED

PROPRIETARY AND CONFIDENTIAL
THE INFORMATION CONTAINED IN THIS DRAWING IS THE SOLE PROPERTY OF GEOSPECTRUM TECHNOLOGIES INC. ANY REPRODUCTION IN PART OR AS A WHOLE WITHOUT THE WRITTEN PERMISSION OF GEOSPECTRUM TECHNOLOGIES INC. IS PROHIBITED.

UNLESS OTHERWISE SPECIFIED:
DIMENSIONS ARE IN INCHES
X.X ± 0.050"
X.XX ± 0.020"
X.XXX ± 0.010"
FRACTIONAL ±1/32"
ANGULAR ±1°
ECCENTRICITY 0.003" MAX
BREAK EDGES
SURFACE FINISH 125

THIRD ANGLE PROJECTION

DWN: L. J. | MATL: N/A | FINISH: N/A
APPR: J. L.

GeoSpectrum Technologies Inc.
10 Akerley Blvd,. Unit 19
Dartmouth, NS
Canada B3B 1J4
Tel:1-902-406-4111
Fax: 1-902-435-8987
geospectrum.ca

PRODUCT: M150-239 | TITLE: CABLE, MARS CONNECTOR

SIZE: B | SCALE: 1:2 | SHEET: 1 OF 1 | DWG. No.: 01-150-101 | DATE: 27 OCT 17 | REV: A