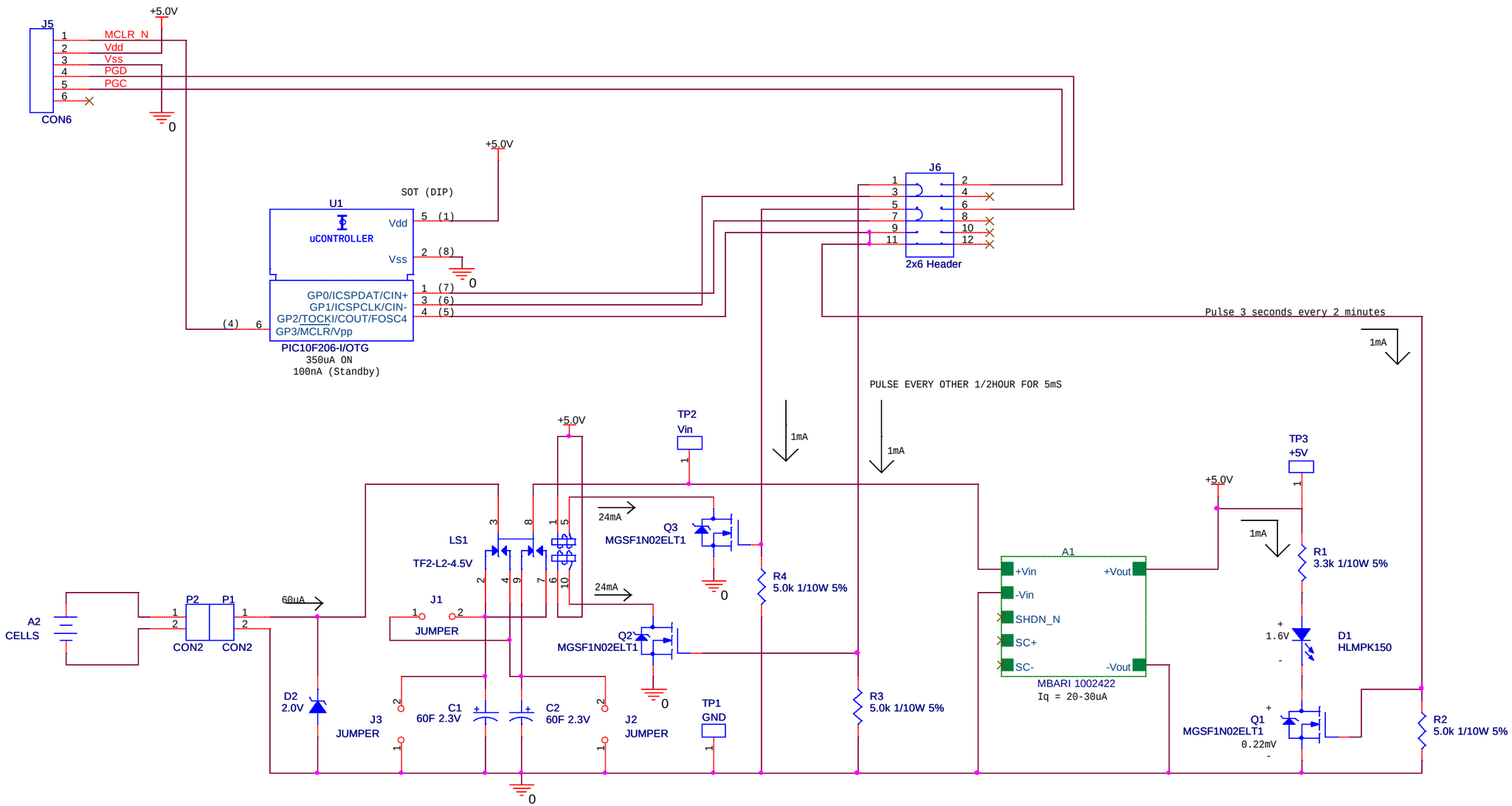

Notes:
1. Initially C1 & C2 must be fully charged
2. Place jumper across J1 when initially charging caps
3. Place jumpers across J2 & J3 when stored and while not in use
4. Jumpers J1, J2, J3 not installed on prototype
5. Capacitors C1 & C2 must be charged to 1.00V on initial startup. After startup, the voltage on C1 & C2 can fall to 0.5V.

Rev.	Date	Description
B	02/25/2005	Revised to reflect as-built
A	11/05/2004	Initial Release

Copyright © 2005 MBARI

All information herin is considered proprietary and may not be copied, duplicated, or transmitted without the express permission of Monterey Bay Aquarium Research Institute.

M B A R I

Designed by: Lance McBride

Drawn by: Lance McBride

Monterey Bay Aquarium Research Institute
7700 Sandholdt Rd., Moss Landing, CA 95039-9644

Title: Mud Power Supply Sample Application

Size: B | Document Number: 1002697 | Rev: A

Date: Friday, February 25, 2005 | Sheet 1 of 1