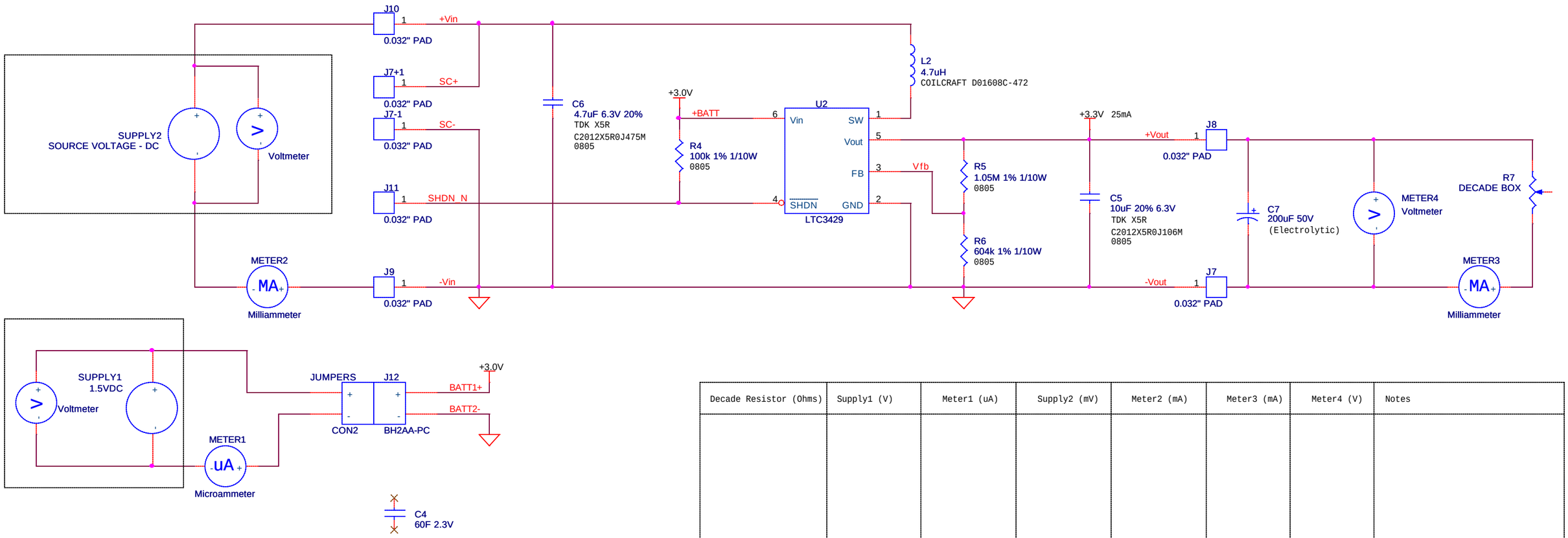

Decade Resistor (Ohms)	Supply1 (V)	Meter1 (uA)	Supply2 (mV)	Meter2 (mA)	Meter3 (mA)	Meter4 (V)	Notes

Copyright © 2004 MBARI

All information herin is considered proprietary and may not be copied, duplicated, or transmitted without the express permission of Monterey Bay Aquarium Research Institute.

M B A R I

Designed by: Lance McBride

Drawn by: Lance McBride

Monterey Bay Aquarium Research Institute
7700 Sandholdt Rd., Moss Landing, CA 95039-9644

Title <Title>

Size B | Document Number <Doc> | Rev <RevCode>

Date: Friday, November 05, 2004 | Sheet 1 of 1