SanDisk®

SSD 5000 UATA 1.8"

Datasheet

Preliminary Revision 0.4

Document No. 80-11-00001

May 2007

SanDisk Corporation

Corporate Headquarters • 601 McCarthy Blvd. • Milpitas, CA 95035

Phone (408) 801-1000 • Fax (408) 801-8657

www.sandisk.com

Table of Contents

1. Introduction 1
   1.1 General Description 1
   1.2 Key Features 1
   1.3 Block Diagram 2
2. General Product Specifications 3
   2.1 Interface 3
   2.2 Capacity 3
   2.3 Performance 3
3. Power Characteristics 4
   3.1 Supply Voltage 4
   3.2 Power Consumption 4
   3.3 Power Consumption Efficiency 4
4. Physical Characteristics 5
   4.1 Mechanical 5
   4.2 Mounting Instructions 5
   4.3 Installation 5
   4.4 Installation Orientation 6
   4.5 Product Label 6
5. Environmental Specifications 7
   5.1 Temperature 7
   5.2 Humidity 7
   5.3 Vibration 7
   5.4 Shock 8
   5.5 Altitude 8
   5.6 Acoustics 8
   5.7 Regulations 9
      5.7.1 EMC 9
      5.7.2 FCC 9
   5.8 RoHS 10
6. Reliability Characteristics 11
   6.1 Error Rate 11
   6.2 Product Life 11
   6.3 Mean Time To Failure 11
   6.4 Preventive Maintenance 11
7. Interface 12
   7.1 Supported Standards 12

7.2 Interface Connector Characteristics 12
7.3 Interface Connector Drawing 12
7.4 Pin Assignment..... 13
7.5 Signal Description 14
7.6 Electrical Characteristics 15
7.7 Driver Terminations 16
7.8 Series Termination..... 17
8. Supported ATA Commands..... 18
8.1 General Commands..... 18
8.2 Read Commands 21
8.3 Write Commands 27
8.4 Security Commands 30
8.5 Host Protected Area Commands (HPA)..... 32
8.6 Power Management Commands 34
9. Troubleshooting..... 36
9.1 Basic Checks..... 36
9.2 BIOS Setup..... 36
9.3 Slow Drive Performance..... 36
10. Ordering Information 37

1. Introduction

1.1 General Description

SanDisk SSD UATA 5000 1.8" is designed to drive the shift of mobile PC users from the hard disk drive to the solid state drive. A drop-in replacement for the hard disk drive, it delivers far superior durability, performance and power efficiency - keeping mobile PCs working optimally in the toughest of conditions.

SanDisk SSD UATA 5000 1.8", with 32 and 64-gigabyte (GB) flash memory, is targeted at enterprise users as the first step in mass consumer adoption of the solid state drive in the mobile PC market.

With no moving parts, SanDisk SSD does not need to spin up into action or to seek files in the way that conventional hard disk drives do – enabling SanDisk SSD to work much faster.

SanDisk, the industry leader in flash storage, is uniquely positioned to drive the paradigm shift in mobile computing to SSDs. Inside enterprise computers such as the thin & light laptop and ultra-mobile PC (UMPC), SanDisk SSD delivers unbeatable durability, system performance and power efficiency.

1.2 Key Features

- High capacity in small form factor
  - 1.8" small form factor
  - 8mm case height
  - Zero Insertion Force (ZIF) connector
- Interface to host
  - Standards: ATA-2/ATA-3/ATA-4/ATA-5/ATA-6/ATA-7
- High performance
  - Host transfer rate: 100MB/s
  - Internal transfer read rate: 67MB/s
  - Internal transfer write rate: 47MB/s
  - Random Read (4KB): 5400 IOPS
  - Average access time: 0.11msec
- Low power consumption
  - Supply voltage: 3.3VDC
  - Typical read: 226mA
  - Typical write: 173mA
  - Typical idle: 36mA
  - Typical standby: 18mA
  - Typical sleep: 8mA

- Highly reliable
  - Mean time to failure (MTTF): 2,000,000 hours, based on Part Stress Analysis
  - Operating shock: 1,500G, 0.5msec half sine
  - Operating vibration: 2.17G, 7-500 Hz
  - Operating temperature: 0°C to 70°C
  - Non-operating temperature and storage: -55°C to 95°C

1.3 Block Diagram

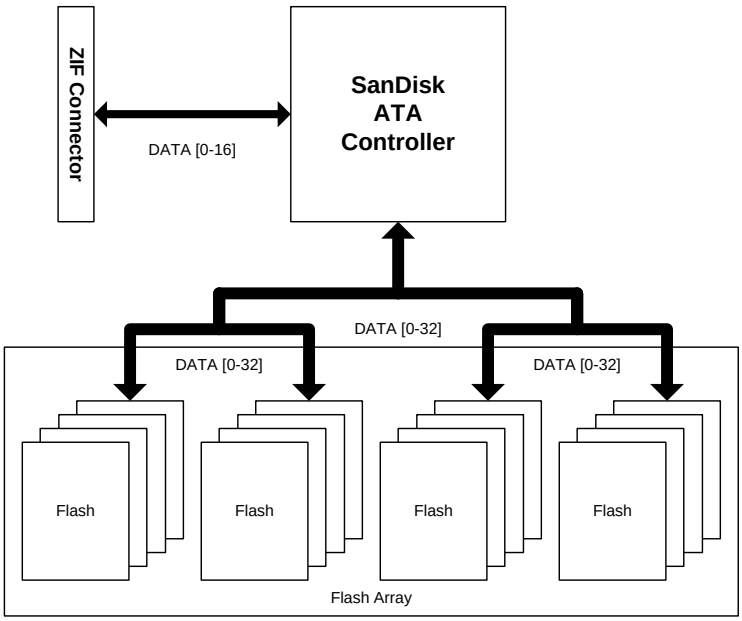

Figure 1: SanDisk SSD UATA 5000 1.8" Block Diagram

2. General Product Specifications

2.1 Interface

The SSD interface complies with ATA-2/ATA-3/ATA-4/ATA-5/ATA-6/ATA-7 standards.

The SSD supports the following ATA modes:

- Ultra DMA mode: 0, 1, 2, 3, 4, 5
- DMA mode: 0, 1, 2
- PIO mode: 3, 4

The SSD supports Ultra ATA 100 and up to 100MB/s interface rate.

2.2 Capacity

Table 1: SanDisk SSD UATA 5000 1.8" Capacity

Unformatted Capacity	Total Number of User-Addressable Sectors in LBA Mode	Number of Logical Cylinders	Number of Logical Heads	Number of Logical Sectors per Track
32GB	61,734,912	16,383	16	63
64GB	123,469,824[1]	16,383	16	63

1. Preliminary

2.3 Performance

Table 2: SanDisk SSD UATA 5000 1.8" Performance

Parameter	Specifications
Host transfer rate:	
Ultra DMA mode[4]	100 MB/s
PIO mode[5]	16.6MB/s
Internal transfer rate (maximum):	
Sequential Read[2,4]	67MB/s
Sequential Write[2,4]	47MB/s
Random Read[1,4]	67MB/s
Random Write[1,4]	7MB/s
IOPS:	
Random Read (512B)[1,4]	7430
Random Write (512B)[1,4]	15
Random Read (4KB)[1,4]	5400
Random Write (4KB)[1,4]	13
Average access time[2,3,4]	0.11 msec
Typical power-on ready time	2.3 sec

1. IOMETER 2003.12.16
2. H2BENCH.c,v 3.6 2002/10/31, Windows 32-bit
3. SSD does not have seek time or latency time
4. Tested in Ultra DMA 5
5. Tested in PIO 4

3. Power Characteristics

3.1 Supply Voltage

Table 3: SanDisk SSD UATA 5000 1.8" Supply Voltage

Parameter	Specifications
Input Voltage	3.3V ± 5%
Maximum Ripple	70mV (peak to peak), 0 – 30MHz
Supply Rise Time	0.1 msec to 100 msec
Maximum Supply Fall Time	5 sec

3.2 Power Consumption

Table 4: SanDisk SSD UATA 5000 1.8" Power Consumption

Parameter	Specifications
Maximum	0.55W
Read (Typical)	0.53W
Write (Typical)	0.53W
Active Idle (Typical)	0.21W
Idle (Typical)	0.12W
Standby (Typical)	0.06W
Sleep (Typical)	0.03W

3.3 Power Consumption Efficiency

Table 5: SanDisk SSD UATA 5000 1.8" Power Consumption Efficiency

Parameter	Capacity (GB)	Specifications (W)
Power consumption efficiency (watts/GB)[1]	32	0.0037
Power consumption efficiency (watts/GB)[1]	64	0.0018[2]

1. Power consumption efficiency is calculated as Power Consumption Idle (watts) / Capacity (GB)
2. Preliminary

4. Physical Characteristics

4.1 Mechanical

Table 6: SanDisk SSD UATA 5000 1.8" Mechanical Dimensions and Weight

Parameter	Specifications
Width	54.0 ± 0.2 mm
Height	8.0 ± 0.15 mm
Length	71.0 ± 0.3 mm
Interconnected Area	
Width	1.2 ± 0.2 mm
Length	3.0 ± 0.125 mm
Maximum Weight	59 gr

4.2 Mounting Instructions

Before unpacking and installing the drive, take anti-static measures in order to avoid damage to the drive. The drive may be exposed to potential handling and electrostatic discharge (ESD) hazards. The following guidelines are recommended:

- Keep the drive in ESD bag until the drive is ready to be installed.
- Wear an ESD-proof wrist strap before handling the drive.
- Avoid touching the drive's connector. Handle the drive using its edge or frame.
- Rest the drive on an antistatic surface until mounting it.
- Handle the drive carefully, taking care not not to drop or bang it against other objects.
- Do not remove, damage or cover any product labels. Removal of such labels voids the warranty.

4.3 Installation

- The drive has been preconfigured at the factory to behave as a "Master". It does not support "Master/Slave" configuration
- The drive should be mounted on a flat surface of 0.1mm or less to avoid distortion.
- The ambient temperature at the top cover should not exceed the maximum operating temperature of the drive.
- Exercise caution when removing the drive from the host as the drive may have heated up.

4.4 Installation Orientation

The SSD can be installed in all axes (6 directions).

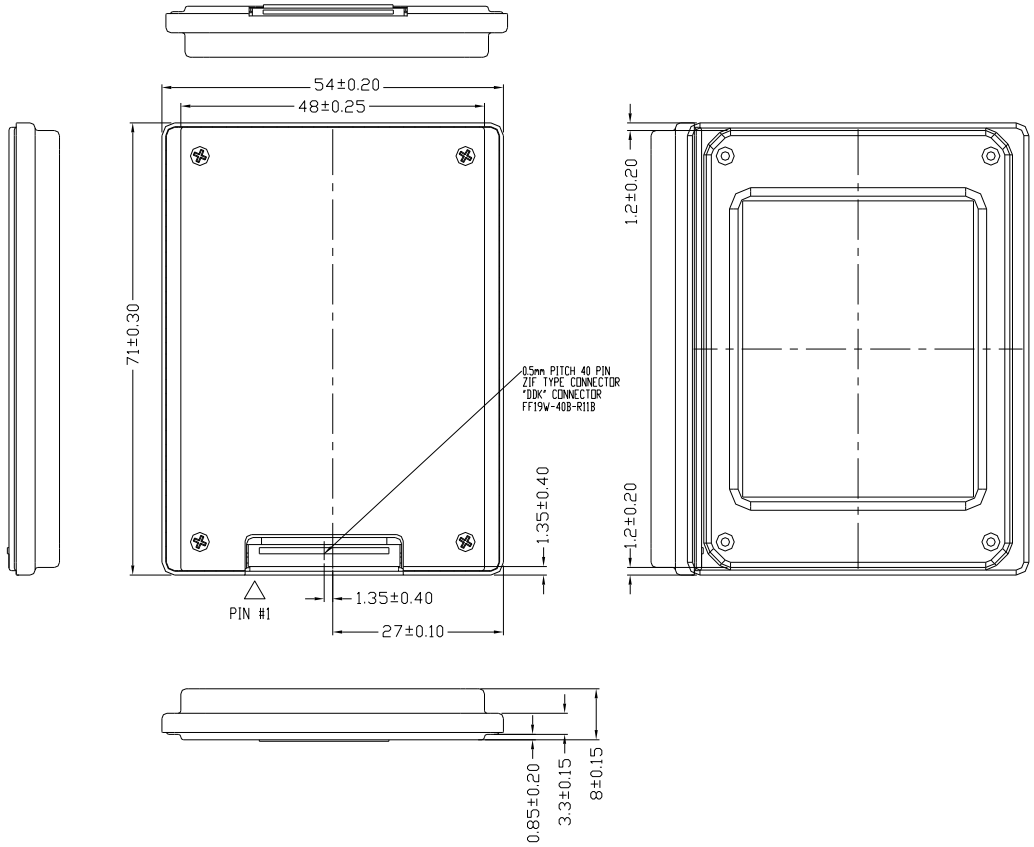

Figure 2: SanDisk SSD UATA 5000 1.8" Mechanical Drawing

4.5 Product Label

The product label adds 0.08mm to the product's height.

5. Environmental Specifications

5.1 Temperature

Table 7: SanDisk SSD UATA 5000 1.8" Temperature Support

Parameter	Specifications
Operating	0°C to 70°C
Non-operating	-55°C to 95°C
Storage	-55°C to 95°C
Maximum temperature gradient	30°C per hour

5.2 Humidity

Table 8: SanDisk SSD UATA 5000 1.8" Humidity Support

Parameter	Specifications
Operating	
Humidity (Non-condensation)	5% to 95%
Maximum web bulb	29°C
Non-operating	
Humidity (Non-condensation)	5% to 95%
Maximum web bulb	38°C
Maximum relative humidity gradient	20% per hour

5.3 Vibration

Table 9: SanDisk SSD UATA 5000 1.8" Vibration Support

Parameter	Specifications
Operating	2.17G, 7 – 500Hz
Non-operating	3.0G, 5 – 500Hz

5.4 Shock

Table 10: SanDisk SSD UATA 5000 1.8" Shock Support

Parameter	Acceleration Force (G)	Half-sine Pulse Duration (msec)
Operating	500	2
	1,000	1
	1,500	0.5
Non-operating	200	10
	1,500	1
	1,500	0.5

5.5 Altitude

Table 11: SanDisk SSD UATA 5000 1.8" Altitude Support

Parameter	Specifications
Operating	-400m to 24,384m (-1,312ft. to 80,000ft.)
Non-operating	-400m to 24,384m (-1,312ft. to 80,000ft.)

5.6 Acoustics

The SSD does not generate any acoustics noise (0dB).

5.7 Regulations

SanDisk SSD is certified to meet the following standards.

Table 12: SanDisk SSD UATA 5000 1.8" Regulation Standards

Standard	Description
Underwriters Laboratories (UL)	UL 60950-1
UL Canadian (ULc)	CAN/CSA C22.2 No. 60950-1-03 (UL 60950)
Technischer Überwachungsverein (TÜV)	EN 60950:2000
Ministry of Information and Communication (MIC)	CISPR Pub. 22 Class B
Bureau of Standards, Metrology and Inspection (BSMI)	CNS 13438:2006, Class B
Australian Communications Authority (ACA)	AS/NZS CISPR 22:2002, Class B
Voluntary Control Council for Interference by Information Technology Equipment (VCCI)	R-1113 and C-1172, Class B[1]

1. This is a Class B product based on the standard of the Voluntary Control Council for Interference by Information Technology Equipment (VCCI). If this equipment is used in a domestic environment, it may cause radio interference. Install and use the equipment according to the instruction manual.

5.7.1 EMC

SanDisk SSD meets:

- Directive 73/23/ECC for product safety
- Directive 89/336/EEC

Table 13: SanDisk SSD UATA 5000 1.8" Electromagnetic Compatibility Support

Parameter	Standard
Emission	EN55022:1998, A1:2000,A2:2003
	IEC 61000-3-3
Immunity	EN55024:1998, A1:2001, A2:2003
	IEC 61000-4-2
	IEC 61000-4-3
	IEC 61000-4-4
	IEC 61000-4-5
	IEC 61000-4-6
	IEC 61000-4-8
	IEC 61000-4-11

5.7.2 FCC

SanDisk SSD meets:

- FCC 47CFR part 15 subpart B class B.

5.8 RoHS

SanDisk SSD meets the "Directive of the European Parliament and of the Council on the Restriction of the Use of Certain Hazardous Substances in Electrical and Electronic Equipment", 2002/95/EC, January 2003. (RoHS Directive).

6. Reliability Characteristics

6.1 Error Rate

Non-recoverable error rate is 1 error per 10^{14} bits read.

6.2 Product Life

The product life is at least 5 years or 43,800 power-on hours, whichever comes earlier under the following conditions:

- Power-on hours = 8,760 per year
- Operating time = 100% of power-on hours
- Active/Idle duty cycle = 90% of the time
- Environmental = temperature, altitude, humidity and voltage within operating ranges
- The drive should be protected from Electrostatic Discharge (ESD)

The product life does not represent any warranty or warranty period. Applicable warranty and warranty period are covered by the purchasing agreement.

Note: Product life is defined as time in service at system conditions while maintaining compliance to the MTTF specification for the device.

6.3 Mean Time To Failure

The Mean Time To Failure (MTTF) is calculated based on Part Stress Analysis.

The following conditions are set for calculation:

- Power-on hours = 8,760 per year
- Operating time = 100% of power-on hours
- Ambient temperature = 25°C

The following are the calculated MTTF.

Table 14: SanDisk SSD UATA 5000 1.8" MTTF

Capacity (GB)	MTTF (hours)
32, 64	2,000,000

6.4 Preventive Maintenance

No preventive maintenance is required.

7. Interface

7.1 Supported Standards

The SSD complies with the following standards:

- ATA-2: ANSI X3.279-1996, AT Attachment Interface with Extensions.
- ATA-3: ANSI INCITS 298-1997, AT Attachment Interface-3.
- ATA/ATAPI-4: ANSI INCITS 317-1998, AT Attachment with Packet Interface-4.
- ATA/ATAPI-5: ANSI INCITS 340-2000, AT Attachment with Packet Interface-5.
- ATA/ATAPI-6: ANSI INCITS 361-2002, AT Attachment with Packet Interface-6.
- ATA/ATAPI-7: ANSI INCITS 397-2005, AT Attachment with Packet Interface-7.

7.2 Interface Connector Characteristics

Table 15: SanDisk SSD UATA 5000 1.8" Connector Characteristics

Parameter	Specifications
Drive Connector	DDK Ltd, FF19W-40B-R11B
Recommended host side FPC	• Width: 20.50 ±0.05mm • Thickness: 0.20 ±0.03mm • Contact resistance: Typical 50ohm • Recommended plating: Gold over Nickel plating • Recommended adhesive: heat-hardened adhesive

7.3 Interface Connector Drawing

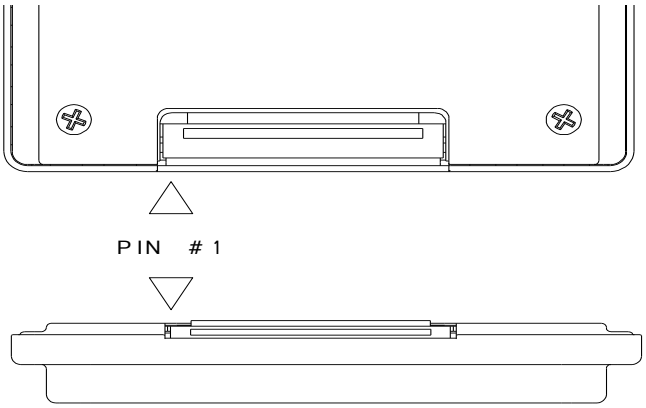

Figure 3: Interface Connector Top and Front View

7.4 Pin Assignment

Table 16: SanDisk SSD UATA 5000 1.8" Pin Assignment

Pin	Signals	Pin	Signals
1	RESERVED	2	RESERVED
3	- RESET	4	GROUND
5	DD 7	6	DD 8
7	DD 6	8	DD 9
9	DD 5	10	DD 10
11	DD 4	12	DD 11
13	DD 3	14	DD 12
15	DD 2	16	DD 13
17	DD 1	18	DD 14
19	DD 0	20	DD 15
21	GROUND	22	DMARQ
23	GROUND	24	- DIOW:STOP
25	- DIOR:- HDMARDY:HSTROBE	26	GROUND
27	IORDY:- DDMARDY:DSTROBE	28	GROUND
29	- DMACK	30	INTRQ
31	DA 1	32	- DIAG:- CBLID
33	DA 0	34	DA 2
35	- CS0	36	- CS1
37	- DASP	38	+3.3V
39	+3.3V	40	RESERVED

7.5 Signal Description

Table 17: SanDisk SSD UATA 5000 1.8" Signal Description

Signal	Pin	Dir	Description
Reserved	1,2,40	-	Reserved
-Reset	3	I	Referred to as hardware reset, shall be used by the host to reset the device. This signal should be held asserted until at least 25usec after power on of the device
Ground	4,21,23,26,28,40	-	Device ground
DD [0..15]	5-20	I/O	16-bit bi-directional data interface between the host and the device. DD [0..7] are used for 8-bit register transfers
DMARQ	22	O	Used for DMA data transfers between host and device, shall be asserted by the device when the device is ready to transfer data to or from the host. For Mulitword DMA transfers, the direction of data transfer is controlled by DIOR- and DIOW-. This signal is used in a handshake manner with DMACK-
-DIOW: Stop	24	I	DIOW - is the strobe signal used by the host to write device registers or the Data port. Data is transferred on the negation of this signal. DIOW - shall be negated by the host prior to initiation of an Ultra DMA burst. STOP shall be negated by the host before data is transferred in an Ultra DMA burst. Assertion of STOP by the host during an Ultra DMA burst signals the termination of the Ultra DMA burst
-DIOR: -HDMARDY: HSTROBE	25	I	DIOR- is the strobe signal used by the host to read device registers or the Data port. Data is transferred on the negation of this signal. HDMARDY- is a flow control signal for Ultra DMA data-in bursts. This signal is asserted by the host to indicate to the device that the host is ready to receive Ultra DMA data-in bursts. The host may negate HDMARDY- to pause an Ultra DMA data-in burst. HSTROBE is the data-out strobe signal from the host for an Ultra DMA data-out burst. Both the rising and falling edge of HSTROBE latch the data from DD(15:0) into the device. The host may stop generating HSTROBE edges to pause an Ultra DMA data-out burst
IORDY: -DDMARDY: DSTROBE	27	O	IORDY is negated to extend the host transfer cycle of any host register access (read or write) when the device is not ready to respond to a data transfer request. If the device requires that the host transfer cycle time be extended for PIO modes 3 and above, the device shall use IORDY. Hosts that use PIO modes 3 and above shall support IORDY. DDMARDY- is a flow control signal for Ultra DMA data-out bursts. This signal is asserted by the device to indicate to the host that the device is ready to receive Ultra DMA data-out bursts. The device may negate DDMARDY- to pause an Ultra DMA data-out burst. DSTROBE is the data-in strobe signal from the device for

Signal	Pin	Dir	Description
			an Ultra DMA data-in burst. Both the rising and falling edge of DSTROBE latch the data from DD [0..15] into the host. The device may stop generating DSTROBE edges to pause an Ultra DMA data-in burst
-DMACK	29	I	Used by the host in response to DMARQ to initiate DMA transfers. For Multiword DMA transfers, the DMARQ/DMACK- handshake is used to provide flow control during the transfer. For Ultra DMA, the DMARQ/DMACK- handshake is used to indicate when the function of interface signals changes. When DMACK- is asserted, CS0- and CS1- shall not be asserted and transfers shall be 16 bits wide
INTRQ	30	O	Used by the device to interrupt the host system when Interrupt Pending is set. When asserted, this signal shall be negated by the device within 400 ns of the negation of DIOR- that reads the Status register to clear Interrupt Pending. When asserted, this signal shall be negated by the device within 400 ns of the negation of DIOW- that writes the Command register to clear Interrupt Pending.
DA [0..2]	33,31, 34	I	3-bit binary coded address asserted by the host to access a register or data port in the device
-CS [0..1]	35,36	I	The chip select signals from the host used to select the Command Block or Control Block registers
-DASP	37	O	Indicates that the device is present and used to drive an external LED when the drive is accessed
+3.3V	38,39	-	Device power

1. "I" – input to the device ; "O" – output from the device

7.6 Electrical Characteristics

Table 18: SanDisk SSD UATA 5000 1.8" Signal Electrical Characteristics

Symbol	Description	Min	Max	Unit
V_{iH}	Voltage input high	2.0	5.5	V
V_{iL}	Voltage input low	-	0.8	V
V_{oH}	Voltage output high	2.4	-	V
V_{oL}	Voltage output low	-	0.5	V
S_{RISE2}	Rising edge slew rate for any signal (UDMA4)	-	1.0	V/nsec
S_{FALL2}	Falling edge slew rate for any signal (UDMA4)	-	1.0	V/nsec

7.7 Driver Terminations

Table 19: SanDisk SSD UATA 5000 1.8" Driver Terminations

Signal	Source	Drive Type[1]	Host[2]	SSD[2]
-RESET	Host	TP		
DD [0..15]	Host/SSD	TS		
DMARQ	SSD	TS	5.6KΩ PD	
-DIOR:-HDMARDY:STROBE	Host	TS		
-DIOW:STOP	Host	TS		
IORDY:-DDMARDY:DSTROBE	SSD	TS	4.7KΩ PU	
CSEL	Host			10KΩ PU
-DMACK	Host	TP		
INTRQ	SSD	TS	10KΩ PD	
DA [0..2]	Host	TP		
-PDIAG:-CBLID	SSD	TS		10KΩ PU
-CS [0..1]	Host	TP		
-DASP	SSD	OC		10KΩ PU

1. TS=Tri-state; OC=Open Collector; TP=Totem-pole; PU=Pull-up; PD=Pull-down
2. PU=Pull-up; PD=Pull-down

7.8 Series Termination

Table 20: SanDisk SSD UATA 5000 1.8" Series Termination

Signal	SSD Termination
-RESET	82Ω
DD [0..15]	33Ω
DMARQ	22Ω
-DIOR:-HDMARDY:HSTROBE	82Ω
-DIOW:STOP	82Ω
IORDY:-DDMARDY:DSTROBE	22Ω
-DMACK	82Ω
INTRQ	22Ω
DA [0..2]	82Ω
-CS [0..1]	82Ω

8. Supported ATA Commands

8.1 General Commands

Download Microcode

Register	7	6	5	4	3	2	1	0
Features	Subcommand							
Sector Count	Sector Count (Low)							
Sector Number	Sector Count (High)							
Cylinder Low	00h							
Cylinder High	00h							
Device/Head	obs	N/A	obs	DEV	0			
Command	92h							

Subcommand:

0x01 – Download is for immediate, temporary use, i.e. into device RAM

0x07 – Save downloaded code for immediate & future use, i.e. into flash.

Execute Device Diagnostic

Register	7	6	5	4	3	2	1	0
Features	N/A							
Sector Count	N/A							
Sector Number	N/A							
Cylinder Low	N/A							
Cylinder High	N/A							
Device/Head	obs	N/A	obs	DEV	N/A			
Command	90h							

Flush Cache

Register	7	6	5	4	3	2	1	0
Features	N/A							
Sector Count	N/A							
Sector Number	N/A							
Cylinder Low	N/A							
Cylinder High	N/A							
Device/Head	obs	N/A	obs	DEV	N/A			
Command	E7h							

There is no need to flush cache, unless it was previously enabled by the SET FEATURES command.

Flush Cache Ext

Register		7	6	5	4	3	2	1	0
Features	Current	Reserved							
	Previous	Reserved							
Sector Count	Current	Reserved							
	Previous	Reserved							
Sector Number	Current	Reserved							
	Previous	Reserved							
Cylinder Low	Current	Reserved							
	Previous	Reserved							
Cylinder High	Current	Reserved							
	Previous	Reserved							
Device/Head		obs	N/A	obs	DEV	N/A			
Command		EAh							
NOTE: The value indicated as Current is the value most recently written to the register. The valueindicated as Previous is the value that was in the register before the most recent write to the register.									

Identify Device

Register	7	6	5	4	3	2	1	0
Features	N/A							
Sector Count	N/A							
Sector Number	N/A							
Cylinder Low	N/A							
Cylinder High	N/A							
Device/Head	obs	N/A	obs	DEV	N/A			
Command	ECh							

Identify Device DMA

Register	7	6	5	4	3	2	1	0
Features	N/A							
Sector Count	N/A							
Sector Number	N/A							
Cylinder Low	N/A							
Cylinder High	N/A							
Device/Head	obs	N/A	obs	DEV	N/A			
Command	EEh							

Device Configuration

Register	7	6	5	4	3	2	1	0
Features	Subcommand							
Sector Count	N/A							
Sector Number	N/A							
Cylinder Low	N/A							
Cylinder High	N/A							
Device/Head	N/A			DEV	N/A			
Command	81h							

The following subcommands are supported:

Command Code	Command Name
C0h	Device Configuration Restore
C1h	Device Configuration Freeze Lock
C2h	Device Configuration Identify
C3h	Device Configuration Set

Initialize Device Parameters

Register	7	6	5	4	3	2	1	0
Features	N/A							
Sector Count	Logical Sectors per track							
Sector Number	N/A							
Cylinder Low	N/A							
Cylinder High	N/A							
Device/Head	obs	N/A	obs	DEV	Max head			
Command	91h							

NOP

Register	7	6	5	4	3	2	1	0
Features	Subcommand code							
Sector Count	N/A							
Sector Number	N/A							
Cylinder Low	N/A							
Cylinder High	N/A							
Device/Head	obs	N/A	obs	DEV	N/A			
Command	00h							

8.2 Read Commands

Read Buffer

Register	7	6	5	4	3	2	1	0
Features	N/A							
Sector Count	N/A							
Sector Number	N/A							
Cylinder Low	N/A							
Cylinder High	N/A							
Device/Head	obs	N/A	obs	DEV	N/A			
Command	E4h							

Enables the host to read the current contents of the device's sector buffer.

The Read Buffer and Write Buffer commands are synchronized such that sequential Write Buffer and Read Buffer commands access the same 512 bytes within the buffer.

Read DMA

Register	7	6	5	4	3	2	1	0
Features	N/A							
Sector Count	Sector Count							
Sector Number	Sector Number or LBA (7:0)							
Cylinder Low	Cylinder Low or LBA (15:8)							
Cylinder High	Cylinder High or LBA (23:16)							
Device/Head	obs	LBA	obs	DEV	Head number or LBA (27:24)			
Command	C8h or C9h							

Read DMA Ext

Register		7	6	5	4	3	2	1	0
Features	Current Previous	Reserved Reserved							
Sector Count	Current Previous	Sector Count (7:0) Sector Count (15:8)							
Sector Number	Current Previous	Sector Number or LBA (7:0) Sector Number or LBA (31:24)							
Cylinder Low	Current Previous	Cylinder Low or LBA (15:8) Cylinder Low or LBA (39:32)							
Cylinder High	Current Previous	Cylinder High or LBA (23:16) Cylinder High or LBA (47:40)							
Device/Head		obs	LBA	obs	DEV	Reserved			
Command		25h							

NOTE: The value indicated as Current is the value most recently written to the register. The value indicated as Previous is the value that was in the register before the most recent write to the register.

Read Multiple

Register	7	6	5	4	3	2	1	0
Features	N/A							
Sector Count	Sector Count							
Sector Number	Sector Number or LBA (7:0)							
Cylinder Low	Cylinder Low or LBA (15:8)							
Cylinder High	Cylinder High or LBA (23:16)							
Device/Head	obs	LBA	obs	DEV	Head number or LBA (27:24)			
Command	C4h							

Similar to READ SECTORS, as E3 supports only multiples of 1 (can burst more than one sector).

Read Multiple_Ext

Register		7	6	5	4	3	2	1	0
Features	Current Previous	Reserved Reserved							
Sector Count	Current Previous	Sector Count (7:0) Sector Count (15:8)							
Sector Number	Current Previous	Sector Number or LBA (7:0) Sector Number or LBA (31:24)							
Cylinder Low	Current Previous	Cylinder Low or LBA (15:8) Cylinder Low or LBA (39:32)							
Cylinder High	Current Previous	Cylinder High or LBA (23:16) Cylinder High or LBA (47:40)							
Device/Head		Obs	LBA	obs	DEV	Reserved			
Command		29h							

NOTE: The value indicated as Current is the value most recently written to the register. The value indicated as Previous is the value that was in the register before the most recent write to the register.

Read Sectors

Register	7	6	5	4	3	2	1	0
Features	N/A							
Sector Count	Sector Count							
Sector Number	Sector Number or LBA (7:0)							
Cylinder Low	Cylinder Low or LBA (15:8)							
Cylinder High	Cylinder High or LBA (23:16)							
Device/Head	obs	LBA	obs	DEV	Head number or LBA (27:24)			
Command	20h or 21h							

Read Sectors Ext

Register		7	6	5	4	3	2	1	0
Features	Current Previous	Reserved Reserved							
Sector Count	Current Previous	Sector Count (7:0) Sector Count (15:8)							
Sector Number	Current Previous	Sector Number or LBA (7:0) Sector Number or LBA (31:24)							
Cylinder Low	Current Previous	Cylinder Low or LBA (15:8) Cylinder Low or LBA (39:32)							
Cylinder High	Current Previous	Cylinder High or LBA (23:16) Cylinder High or LBA (47:40)							
Device/Head		Obs	LBA	obs	DEV	Reserved			
Command		24h							

NOTE: The value indicated as Current is the value most recently written to the register. The value indicated as Previous is the value that was in the register before the most recent write to the register.

Read Verify Sectors

Register	7	6	5	4	3	2	1	0
Features	N/A							
Sector Count	Sector Count							
Sector Number	Sector Number or LBA (7:0)							
Cylinder Low	Cylinder Low or LBA (15:8)							
Cylinder High	Cylinder High or LBA (23:16)							
Device/Head	obs	LBA	obs	DEV	Head number or LBA (27:24)			
Command	40h or 41h							

Similar to Read, except that no data is transferred to the host.

Read Verify Sectors Ext

Register		7	6	5	4	3	2	1	0
Features	Current Previous	Reserved Reserved							
Sector Count	Current Previous	Sector Count (7:0) Sector Count (15:8)							
Sector Number	Current Previous	Sector Number or LBA (7:0) Sector Number or LBA (31:24)							
Cylinder Low	Current Previous	Cylinder Low or LBA (15:8) Cylinder Low or LBA (39:32)							
Cylinder High	Current Previous	Cylinder High or LBA (23:16) Cylinder High or LBA (47:40)							
Device/Head		Obs	LBA	obs	DEV	Reserved			
Command		42h							

NOTE: The value indicated as Current is the value most recently written to the register. The value indicated as Previous is the value that was in the register before the most recent write to the register.

Recalibrate

Register	7	6	5	4	3	2	1	0
Features	N/A							
Sector Count	N/A							
Sector Number	N/A							
Cylinder Low	N/A							
Cylinder High	N/A							
Device/Head	obs	LBA	obs	DEV	N/A			
Command	10h							

Seek

Register	7	6	5	4	3	2	1	0
Features	N/A							
Sector Count	N/A							
Sector Number	Sector Number or LBA (7:0)							
Cylinder Low	Cylinder Low or LBA (15:8)							
Cylinder High	Cylinder High or LBA (23:16)							
Device/Head	obs	LBA	obs	DEV	Head number or LBA (27:24)			
Command	70h							

Set Features

Register	7	6	5	4	3	2	1	0
Features	Subcommand							
Sector Count	Subcommand specific							
Sector Number	Subcommand specific							
Cylinder Low	Subcommand specific							
Cylinder High	Subcommand specific							
Device/Head	obs	N/A	obs	DEV	N/A			
Command	EFh							

The following subcommands are supported:

Command Code	Command Name
02h	Enable write cache
03h	Set transfer mode
05h	Enable Advanced Power Management
42h	Enable automatic acoustic management
55h	Disable look-ahead
66h	Disable reverting to power-on defaults
82h	Disable write cache
85h	Disable Advanced Power Management
AAh	Enable look-ahead
C2h	Disable automatic acoustic management
CCh	Enable reverting to power-on defaults

S.M.A.R.T Command

Register	7	6	5	4	3	2	1	0
Features	N/A							
Sector Count	Sectors per block							
Sector Number	N/A							
Cylinder Low	N/A							
Cylinder High	N/A							
Device/Head	obs	N/A	Obs	DEV	N/A			
Command	C6h							

The following subcommands are supported:

Command Code	Command Name
D0h	Smart Read Data
D1h	Read Attribute Thresholds
D2h	Enable Disable Attribute Autosave
D3h	Save Attribute Values
D4h	Execute Offline Immediate
D5h	Smart Read Log
D6h	Smart Write Log
D8h	Smart Enable Operations
D9h	Smart Disable Operations
DAh	Smart Return Status
DBh	Disable Automatic Offline

Set Multiple Mode

Register	7	6	5	4	3	2	1	0
Features	N/A							
Sector Count	Sectors per block							
Sector Number	N/A							
Cylinder Low	N/A							
Cylinder High	N/A							
Device/Head	obs	N/A	obs	DEV	N/A			
Command	C6h							

Establish the block count for READ MULTIPLE, WRITE MULTIPLE commands.

8.3 Write Commands

Write Buffer

Register	7	6	5	4	3	2	1	0
Features	N/A							
Sector Count	N/A							
Sector Number	N/A							
Cylinder Low	N/A							
Cylinder High	N/A							
Device/Head	obs	N/A	obs	DEV	N/A			
Command	E8h							

Enable the host to write the contents of one sector in the device's buffer.

The READ BUFFER and WRITE BUFFER commands are synchronized such that sequential WRITE BUFFER and READ BUFFER commands access the same 512 bytes within the buffer.

Write DMA

Register	7	6	5	4	3	2	1	0
Features	N/A							
Sector Count	Sector Count							
Sector Number	Sector Number or LBA (7:0)							
Cylinder Low	Cylinder Low or LBA (15:8)							
Cylinder High	Cylinder High or LBA (23:16)							
Device/Head	obs	LBA	obs	DEV	Head number or LBA (27:24)			
Command	CAh or CBh							

Write DMA Ext

Register		7	6	5	4	3	2	1	0
Features	Current Previous	Reserved Reserved							
Sector Count	Current Previous	Sector Count (7:0) Sector Count (15:8)							
Sector Number	Current Previous	Sector Number or LBA (7:0) Sector Number or LBA (31:24)							
Cylinder Low	Current Previous	Cylinder Low or LBA (15:8) Cylinder Low or LBA (39:32)							
Cylinder High	Current Previous	Cylinder High or LBA (23:16) Cylinder High or LBA (47:40)							
Device/Head		Obs	LBA	obs	DEV	Reserved			
Command		35h							

NOTE: The value indicated as Current is the value most recently written to the register. The value indicated as Previous is the value that was in the register before the most recent write to the register.

Write Multiple

Register	7	6	5	4	3	2	1	0
Features	N/A							
Sector Count	Sector Count							
Sector Number	Sector Number or LBA (7:0)							
Cylinder Low	Cylinder Low or LBA (15:8)							
Cylinder High	Cylinder High or LBA (23:16)							
Device/Head	obs	LBA	obs	DEV	Head number or LBA (27:24)			
Command	C5h							

Similar to WRITE SECTORS except the basic transfer (after which device sets BSY and host should wait for interrupt) is not 1 sector, but is configurable by SET MULTIPLE command.

Write Multiple Ext

Register		7	6	5	4	3	2	1	0
Features	Current Previous	Reserved Reserved							
Sector Count	Current Previous	Sector Count (7:0) Sector Count (15:8)							
Sector Number	Current Previous	Sector Number or LBA (7:0) Sector Number or LBA (31:24)							
Cylinder Low	Current Previous	Cylinder Low or LBA (15:8) Cylinder Low or LBA (39:32)							
Cylinder High	Current Previous	Cylinder High or LBA (23:16) Cylinder High or LBA (47:40)							
Device/Head		Obs	LBA	obs	DEV	Reserved			
Command		39h							

NOTE: The value indicated as Current is the value most recently written to the register. The value indicated as Previous is the value that was in the register before the most recent write to the register.

Write Sectors

Register	7	6	5	4	3	2	1	0
Features	N/A							
Sector Count	Sector Count							
Sector Number	Sector Number or LBA (7:0)							
Cylinder Low	Cylinder Low or LBA (15:8)							
Cylinder High	Cylinder High or LBA (23:16)							
Device/Head	obs	LBA	obs	DEV	Head number or LBA (27:24)			
Command	30h or 31h							

Write Sectors Ext

Register		7	6	5	4	3	2	1	0
Features	Current	Reserved							
	Previous	Reserved							
Sector Count	Current	Sector Count (7:0)							
	Previous	Sector Count (15:8)							
Sector Number	Current	Sector Number or LBA (7:0)							
	Previous	Sector Number or LBA (31:24)							
Cylinder Low	Current	Cylinder Low or LBA (15:8)							
	Previous	Cylinder Low or LBA (39:32)							
Cylinder High	Current	Cylinder High or LBA (23:16)							
	Previous	Cylinder High or LBA (47:40)							
Device/Head		Obs	LBA	obs	DEV	Reserved			
Command		34h							

NOTE: The value indicated as Current is the value most recently written to the register. The value indicated as Previous is the value that was in the register before the most recent write to the register.

Write Verify

Register	7	6	5	4	3	2	1	0
Features	N/A							
Sector Count	Sector Count							
Sector Number	Sector Number or LBA (7:0)							
Cylinder Low	Cylinder Low or LBA (15:8)							
Cylinder High	Cylinder High or LBA (23:16)							
Device/Head	obs	LBA	obs	DEV	Head number or LBA (27:24)			
Command	3Ch							

8.4 Security Commands

Security Disable Password

Register	7	6	5	4	3	2	1	0
Features	N/A							
Sector Count	N/A							
Sector Number	N/A							
Cylinder Low	N/A							
Cylinder High	N/A							
Device/Head	obs	N/A	obs	DEV	N/A			
Command	F6h							

Security Erase Prepare

Register	7	6	5	4	3	2	1	0
Features	N/A							
Sector Count	N/A							
Sector Number	N/A							
Cylinder Low	N/A							
Cylinder High	N/A							
Device/Head	obs	N/A	obs	DEV	N/A			
Command	F3h							

Security Erase Unit

Register	7	6	5	4	3	2	1	0
Features	N/A							
Sector Count	N/A							
Sector Number	N/A							
Cylinder Low	N/A							
Cylinder High	N/A							
Device/Head	obs	N/A	obs	DEV	N/A			
Command	F4h							

Security Freeze Lock

Register	7	6	5	4	3	2	1	0
Features	N/A							
Sector Count	N/A							
Sector Number	N/A							
Cylinder Low	N/A							
Cylinder High	N/A							
Device/Head	obs	N/A	obs	DEV	N/A			
Command	F5h							

Security Set Password

Register	7	6	5	4	3	2	1	0
Features	N/A							
Sector Count	N/A							
Sector Number	N/A							
Cylinder Low	N/A							
Cylinder High	N/A							
Device/Head	obs	N/A	obs	DEV	N/A			
Command	F1h							

Security Unlock

Register	7	6	5	4	3	2	1	0
Features	N/A							
Sector Count	N/A							
Sector Number	N/A							
Cylinder Low	N/A							
Cylinder High	N/A							
Device/Head	obs	N/A	obs	DEV	N/A			
Command	F2h							

8.5 Host Protected Area Commands (HPA)

Read Native Max Address

Register	**7**	**6**	**5**	**4**	**3**	**2**	**1**	**0**
Features	N/A							
Sector Count	N/A							
Sector Number	N/A							
Cylinder Low	N/A							
Cylinder High	N/A							
Device/Head	obs	LBA	obs	DEV	N/A			
Command	F8h							

Read Native Max Address Ext

Register		**7**	**6**	**5**	**4**	**3**	**2**	**1**	**0**
Features	Current Previous	Reserved Reserved							
Sector Count	Current Previous	Reserved Reserved							
Sector Number	Current Previous	Reserved Reserved							
Cylinder Low	Current Previous	Reserved Reserved							
Cylinder High	Current Previous	Reserved Reserved							
Device/Head		Obs	LBA	obs	DEV	N/A			
Command		27h							

NOTE: The value indicated as Current is the value most recently written to the register. The value indicated as Previous is the value that was in the register before the most recent write to the register.

Set Max Address

Register	**7**	**6**	**5**	**4**	**3**	**2**	**1**	**0**
Features	N/A							
Sector Count	N/A							V V
Sector Number	SET MAX LBA (7:0)							
Cylinder Low	SET MAX LBA (15:8)							
Cylinder High	SET MAX LBA (23:16)							
Device/Head	obs	LBA	obs	DEV	SET MAX LBA (27:24)			
Command	F9h							

Set Max Address Ext

Register		7	6	5	4	3	2	1	0
Features	Current Previous	Reserved Reserved							
Sector Count	Current Previous	Reserved							V V
Sector Number	Current Previous	SET MAX LBA (7:0) SET MAX LBA (31:24)							
Cylinder Low	Current Previous	SET MAX LBA (15:8) SET MAX LBA (39:32)							
Cylinder High	Current Previous	SET MAX LBA (23:16) SET MAX LBA (47:40)							
Device/Head		obs	LBA	obs	DEV	N/A			
Command		37h							

NOTE: The value indicated as Current is the value most recently written to the register. The value indicated as Previous is the value that was in the register before the most recent write to the register.

8.6 Power Management Commands

Check Power Mode

Register	7	6	5	4	3	2	1	0
Features	N/A							
Sector Count	N/A							
Sector Number	N/A							
Cylinder Low	N/A							
Cylinder High	N/A							
Device/Head	obs	N/A	obs	DEV	N/A			
Command	98h or E5h							

Returns current mode in Sector Count register:

00 – device is in Standby Mode

0x80 – device is in Idle Mode

0xFF – device is in Active Mode.

If responding to command removed the device from power-saving mode, on completion of the command the device will return to this mode.

Idle

Register	7	6	5	4	3	2	1	0
Features	N/A							
Sector Count	Time period value							
Sector Number	N/A							
Cylinder Low	N/A							
Cylinder High	N/A							
Device/Head	obs	N/A	Obs	DEV	N/A			
Command	97h or E3h							

This command will put the device into Idle mode immediately. If Timer period value is non-zero, the command also sets Standby counter, which will be used once device returns to active mode.

Idle Immediate

Register	7	6	5	4	3	2	1	0
Features	N/A							
Sector Count	N/A							
Sector Number	N/A							
Cylinder Low	N/A							
Cylinder High	N/A							
Device/Head	obs	N/A	obs	DEV	N/A			
Command	95h or E1h							

This command puts the device into Idle mode immediately

Sleep

Register	7	6	5	4	3	2	1	0
Features	N/A							
Sector Count	N/A							
Sector Number	N/A							
Cylinder Low	N/A							
Cylinder High	N/A							
Device/Head	Obs	N/A	obs	DEV	N/A			
Command	99h or E6h							

Standby

Register	7	6	5	4	3	2	1	0
Features	N/A							
Sector Count	Time period value							
Sector Number	N/A							
Cylinder Low	N/A							
Cylinder High	N/A							
Device/Head	obs	N/A	obs	DEV	N/A			
Command	96h or E2h							

This command puts the device into Standby mode immediately. If Timer period value is non-zero, the commanc also sets Standby counter, which will be used once device returns to active mode.

Standby Immediate

Register	7	6	5	4	3	2	1	0
Features	N/A							
Sector Count	N/A							
Sector Number	N/A							
Cylinder Low	N/A							
Cylinder High	N/A							
Device/Head	obs	N/A	obs	DEV	N/A			
Command	94h or E0h							

This command puts the device into Standby mode immediately.

9. Troubleshooting

9.1 Basic Checks

Most disk problems are caused by improper disk installation that can be easily fixed.

Cable problems:

- Improper cable has been used
- Cables are too long to support the transfer rate
- The cable has not been properly connected to the device
- The device's connector is not properly locked
- A cable was connected with reverse polarity

Power problems:

- Power supply is below SanDisk SSD requirements

9.2 BIOS Setup

Verify that the disk is enabled in the BIOS. In most new BIOS setups, there is an option for drive auto-identification.

9.3 Slow Drive Performance

Poor disk performance may be due to one of the following reasons:

- SanDisk SSD was set in the BIOS to support slower Ultra DMA modes (UMDA 0 through 4)
- SanDisk SSD is operating in PIO mode under Windows
- DMA transfer mode may not be enabled in the Windows OS settings. Windows has a fallback mechanism that causes the disk operating mode to revert to PIO if too many errors occur
- Check that Write Caching is enabled in the drive Properties.

10. Ordering Information

Table 21: SanDisk SSD UATA 5000 1.8" Ordering Information

SDIGF-CCCU-XXXXXX	
SD	SanDisk
I	Interface: U – UATA ZIF
G	Generation: 5000 (5th)
F	Form factor: B – 1.8" (8mm)
CCC	Capacity (GB): 032 064
U	Units: G (GB)
XXXXXX	Customer code reference

Example:

SanDisk SSD UATA 5000 1.8" ZIF 32GB: SDU5B-032G-000000

SanDisk® Corporation general policy does not recommend the use of its products in life support applications where in a failure or malfunction of the product may directly threaten life or injury. Per SanDisk Terms and Conditions of Sale, the user of SanDisk products in life support applications assumes all risk of such use and indemnifies SanDisk against all damages. See "Disclaimer of Liability."

This document is for information use only and is subject to change without prior notice. SanDisk Corporation assumes no responsibility for any errors that may appear in this document, nor for incidental or consequential damages resulting from the furnishing, performance or use of this material. No part of this document may be reproduced, transmitted, transcribed, stored in a retrievable manner or translated into any language or computer language, in any form or by any means, electronic, mechanical, magnetic, optical, chemical, manual or otherwise, without the prior written consent of an officer of SanDisk Corporation.

All parts of the SanDisk documentation are protected by copyright law and all rights are reserved.

SanDisk and the SanDisk logo are registered trademarks of SanDisk Corporation. CompactFlash is a U.S. registered trademark of SanDisk Corporation.

Product names mentioned herein are for identification purposes only and may be trademarks and/or registered trademarks of their respective companies.

© 2007 SanDisk Corporation. All rights reserved.

SanDisk products are covered or licensed under one or more of the following U.S. Patent Nos. 5,070,032; 5,095,344; 5,168,465; 5,172,338; 5,198,380; 5,200,959; 5,268,318; 5,268,870; 5,272,669; 5,418,752; 5,602,987. Other U.S. and foreign patents awarded and pending.

Document No. 80-11-00001 Rev. 0.4 May 07 Printed in U.S.A.

Revision History

Feb. 2007	*Revision 0.3—initial release*
May 2007	*Revision 0.4—second release (preliminary data on 64GB)*