REVISION HISTORY		
REV	ENGINEERING CHANGE NUMBER	APPROVED

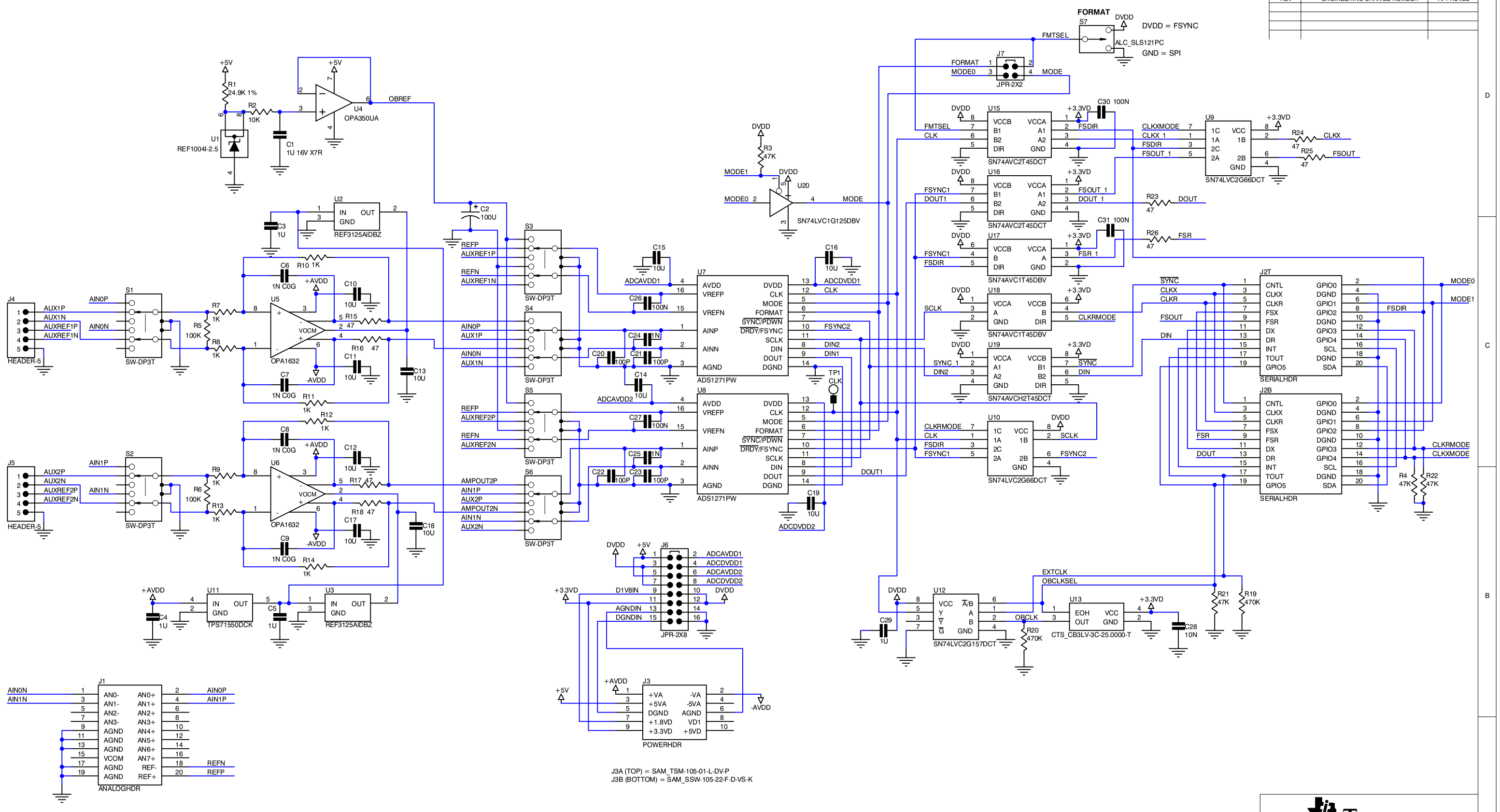

J3A (TOP) = SAM_TSM-105-01-L-DV-P
J3B (BOTTOM) = SAM_SSW-105-22-F-D-VS-K

J1A (TOP) = SAM_TSM-110-01-L-DV-P
J1B (BOTTOM) = SAM_SSW-110-22-F-D-VS-K

TEXAS INSTRUMENTS

DATA ACQUISITION PRODUCTS
HIGH-PERFORMANCE ANALOG DIVISION
SEMICONDUCTOR GROUP

6730 SOUTH TUCSON BLVD., TUCSON, AZ 85706 USA

TITLE
ADS1271EVM

ENGINEER **M. P. ASHTON**			
DRAWN BY **M. P. ASHTON**			
DOCUMENT CONTROL NO. **6466898**	SIZE **B**	DATE **21 OCT 2004**	REV **C**
SHEET **1** OF **1**	FILE		