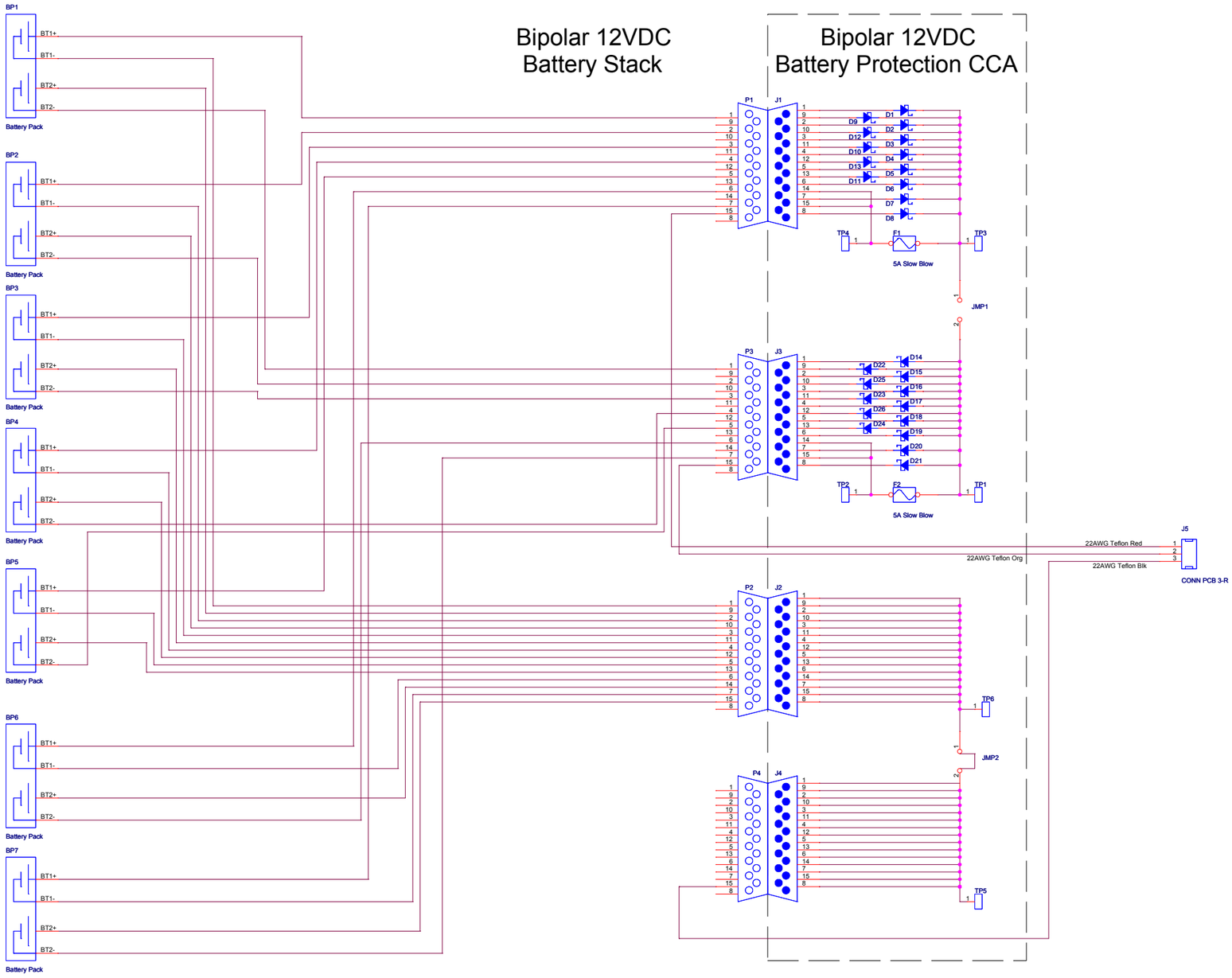

Title <Title>		
Size B	Document Number <Doc>	Rev <RevCode>
Date: Monday, December 06, 2010	Sheet 1 of 1	