| ZONE | REV. | REVISIONS DESCRIPTION | DATE | APPROVED |
|---|---|---|---|---|
| | | | | |
| | | | | |

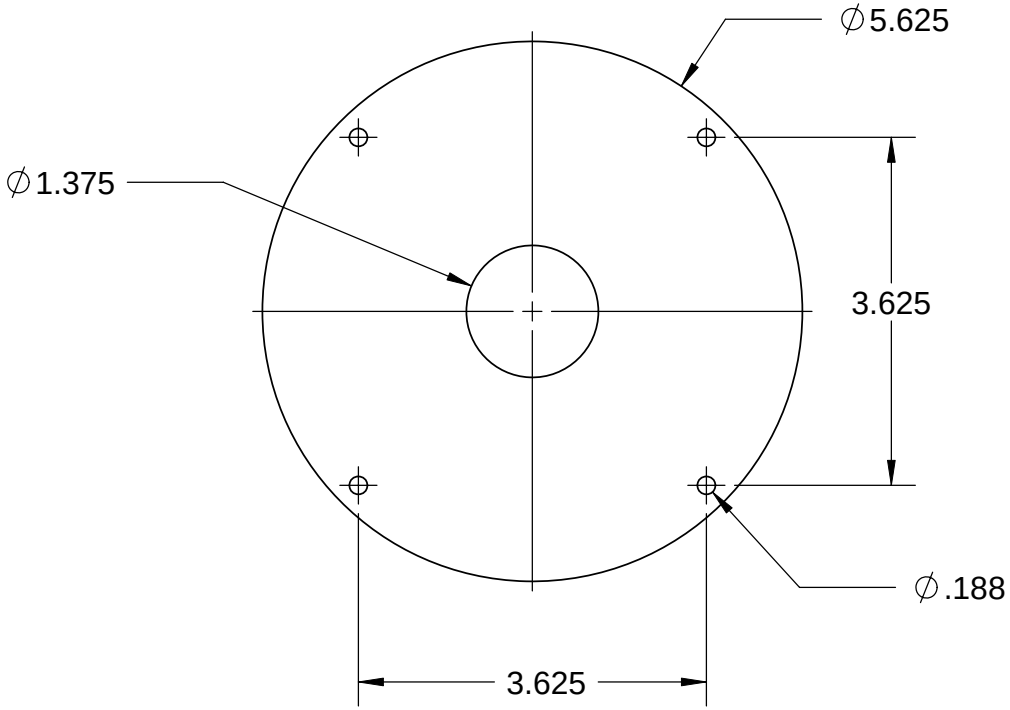


DIMENSIONS ARE IN INCHES
TOLERANCES:
FRACTIONAL ±
ANGULAR: MACH ± BEND ±
TWO PLACE DECIMAL ±
THREE PLACE DECIMAL ±

| APPROVALS | | DATE |
|---|---|---|
| DRAWN | | |
| CHECKED | | |
| ENGINEER | | |
| | | |


**Monterey Bay Aquarium Research Institute**

**MBARI**
**7700 Sandholdt RD.**
**Moss Landing, CA 95039**
**PH: (831) 775-1700**


MATERIAL --

FINISH --

PROJECT NO.

PROJECT

| NEXT ASSY | USED ON |
|---|---|
| APPLICATION | DO NOT SCALE DRAWING |

SIZE **A** | DWG. NO. | REV.

SCALE:1:1 | WEIGHT: | SHEET 1 OF 1