Ver	Date	Change	By
A	Nov 17, 2009	Change R1 on IA board From 499 ohms (G=100) to 1000 ohms (G=50)	Gene M.
B	Dec 16, 2009	Add Buck Boost Regulator	Gene M.
C	Dec 22. 2009	Add Bluetooth Adapter	Gene M.
D	Jan 6, 2010	Add Battery case connector wiring	Gene M.

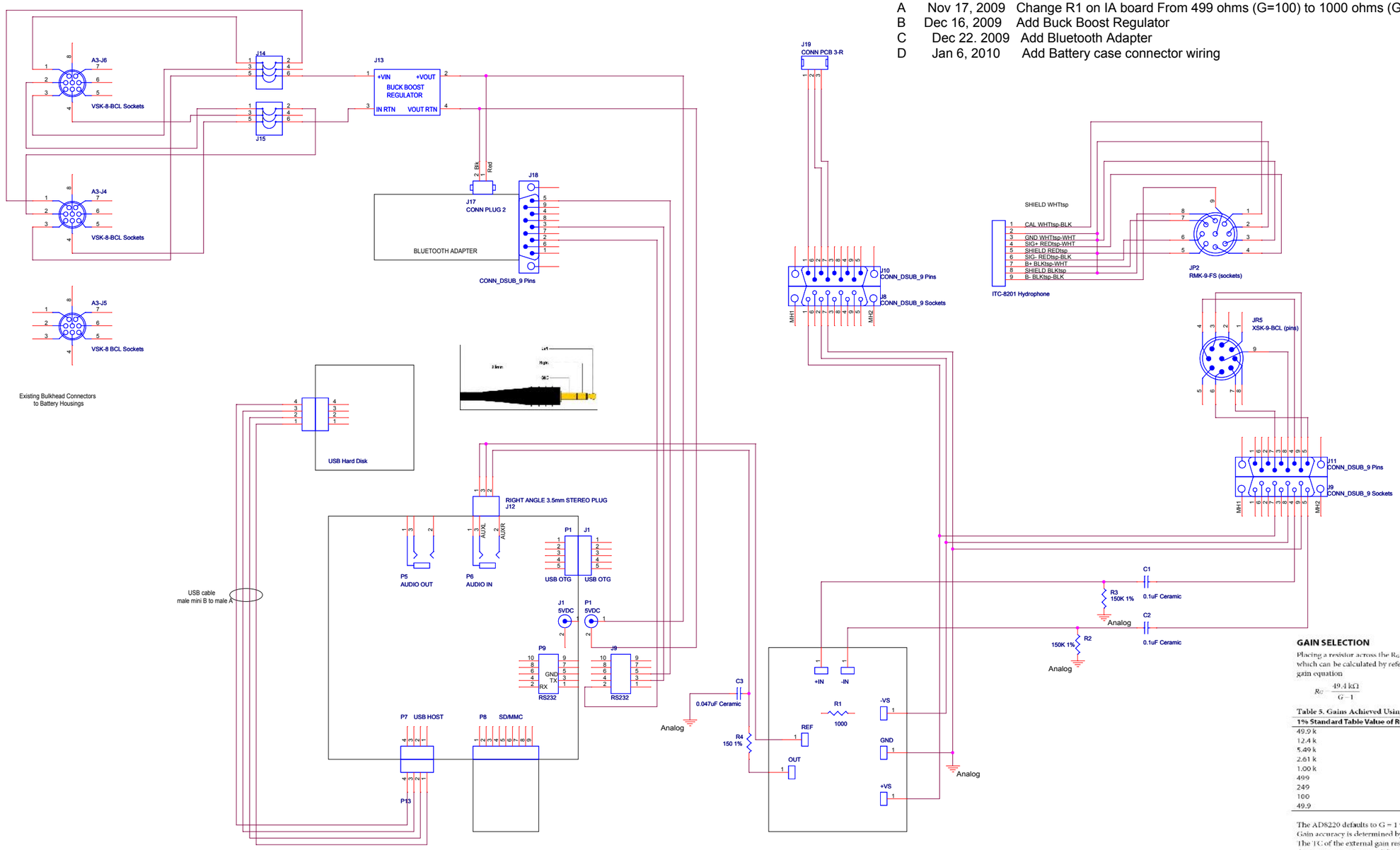

GAIN SELECTION

Placing a resistor across the R_G terminals sets the AD8220 gain, which can be calculated by referring to Table 5 or by using the gain equation

$$R_G = \frac{49.4\ k\Omega}{G-1}$$

Table 5. Gains Achieved Using 1% Resistors

1% Standard Table Value of RG (Ω)	Calculated Gain
49.9 k	1.990
12.4 k	4.984
5.49 k	9.998
2.61 k	19.93
1.00 k	50.40
499	100.0
249	199.4
100	495.0
49.9	991.0

The AD8220 defaults to G = 1 when no gain resistor is used. Gain accuracy is determined by the absolute tolerance of R_G. The TC of the external gain resistor increases the gain drift of the instrumentation amplifier. Gain error and gain drift are kept to a minimum when the gain resistor is not used.

NOTES:
1. All caps should be polyester

Monterey Bay Aquarium Research Institute
7700 Sandhold Road, Moss Landing, CA 95039

Title: McStar Elex Housing Wiring

Engineer	Size	Document Number	Layout File	Rev
Gene M.	B	<Doc>	N/A	-
Layout N/A	Date: Monday, December 06, 2010		Sheet 1 of 1	