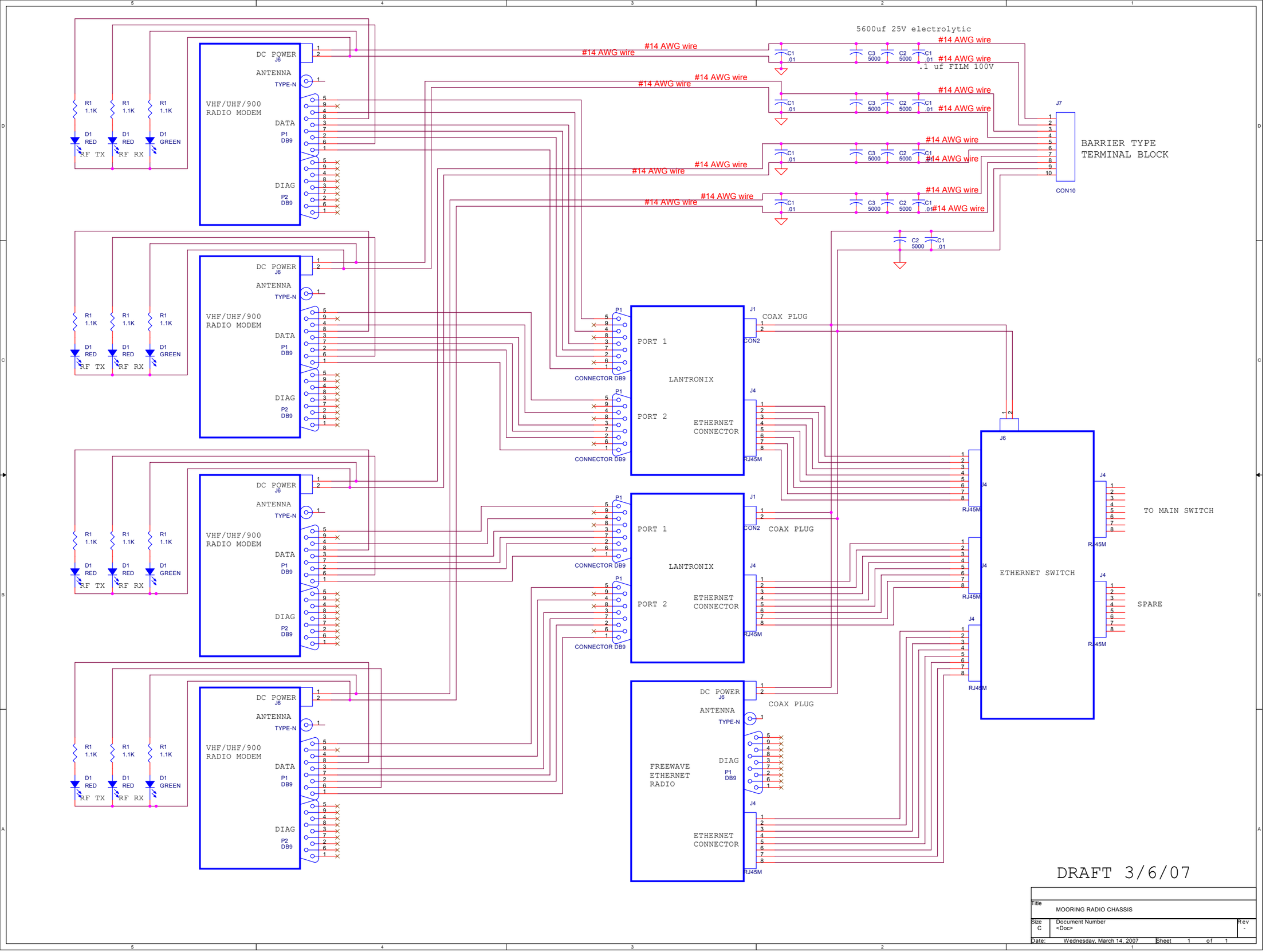
5600uf 25V electrolytic
.1 uf FILM 100V
#14 AWG wire
VHF/UHF/900
RADIO MODEM
DC POWER
J6
ANTENNA
TYPE-N
DATA
P1
DB9
DIAG
P2
DB9
R1
1.1K
D1
RED
RF TX
RF RX
D1
GREEN
C1
.01
C3
5000
C2
5000
J7
BARRIER TYPE
TERMINAL BLOCK
CON10
P1
CONNECTOR DB9
J1
COAX PLUG
CON2
PORT 1
PORT 2
LANTRONIX
ETHERNET
CONNECTOR
J4
RJ45M
J6
ETHERNET SWITCH
TO MAIN SWITCH
SPARE
FREEWAVE
ETHERNET
RADIO
DRAFT 3/6/07
Title
MOORING RADIO CHASSIS
Size
C
Document Number
<Doc>
Rev
-
Date:
Wednesday, March 14, 2007
Sheet
1
of
1