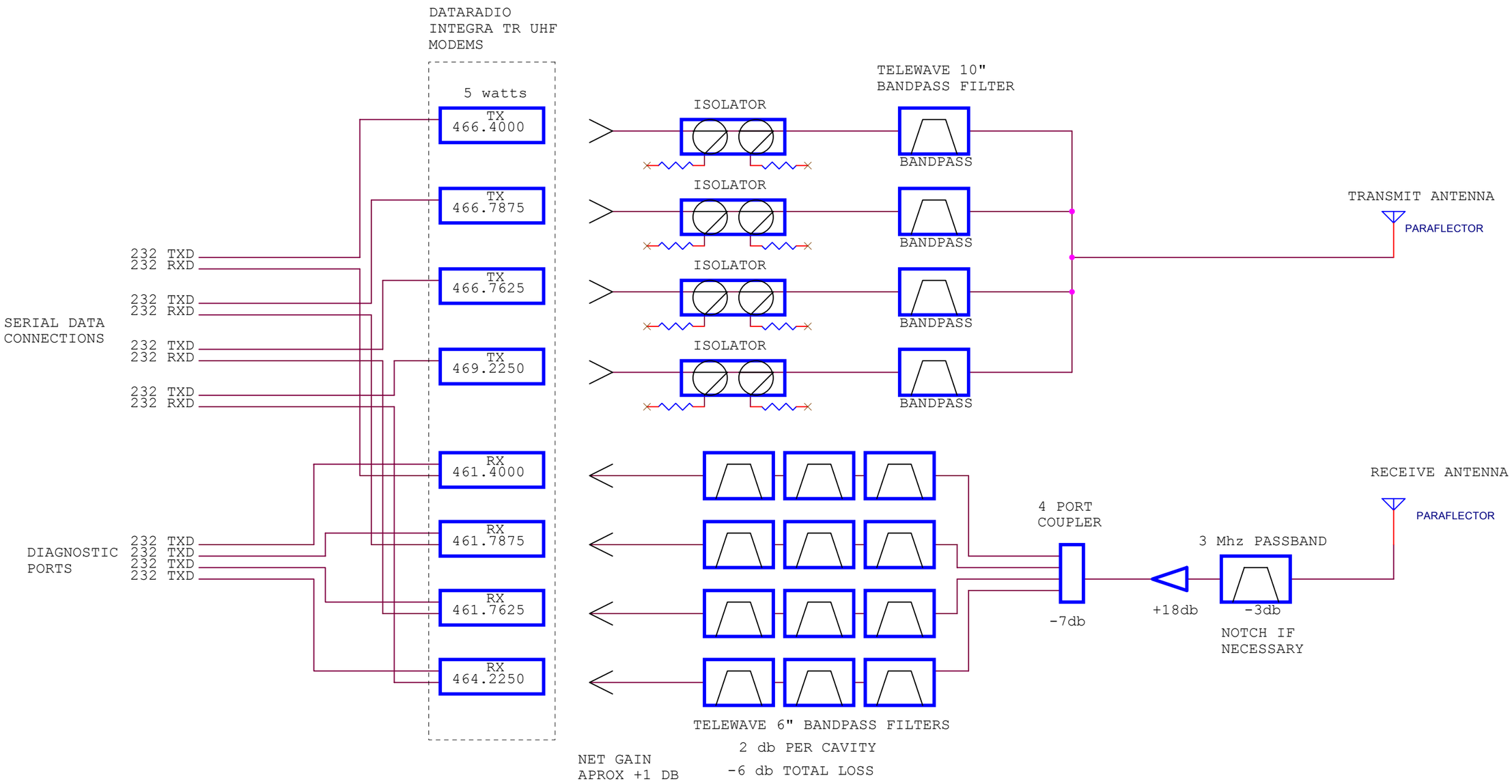

DRAFT 11-15-07

Title	MBARI UHF COMBINER SYSTEM	
Size B	Document Number <Doc>	Rev -
Date: Thursday, November 15, 2007	Sheet 1 of 1	