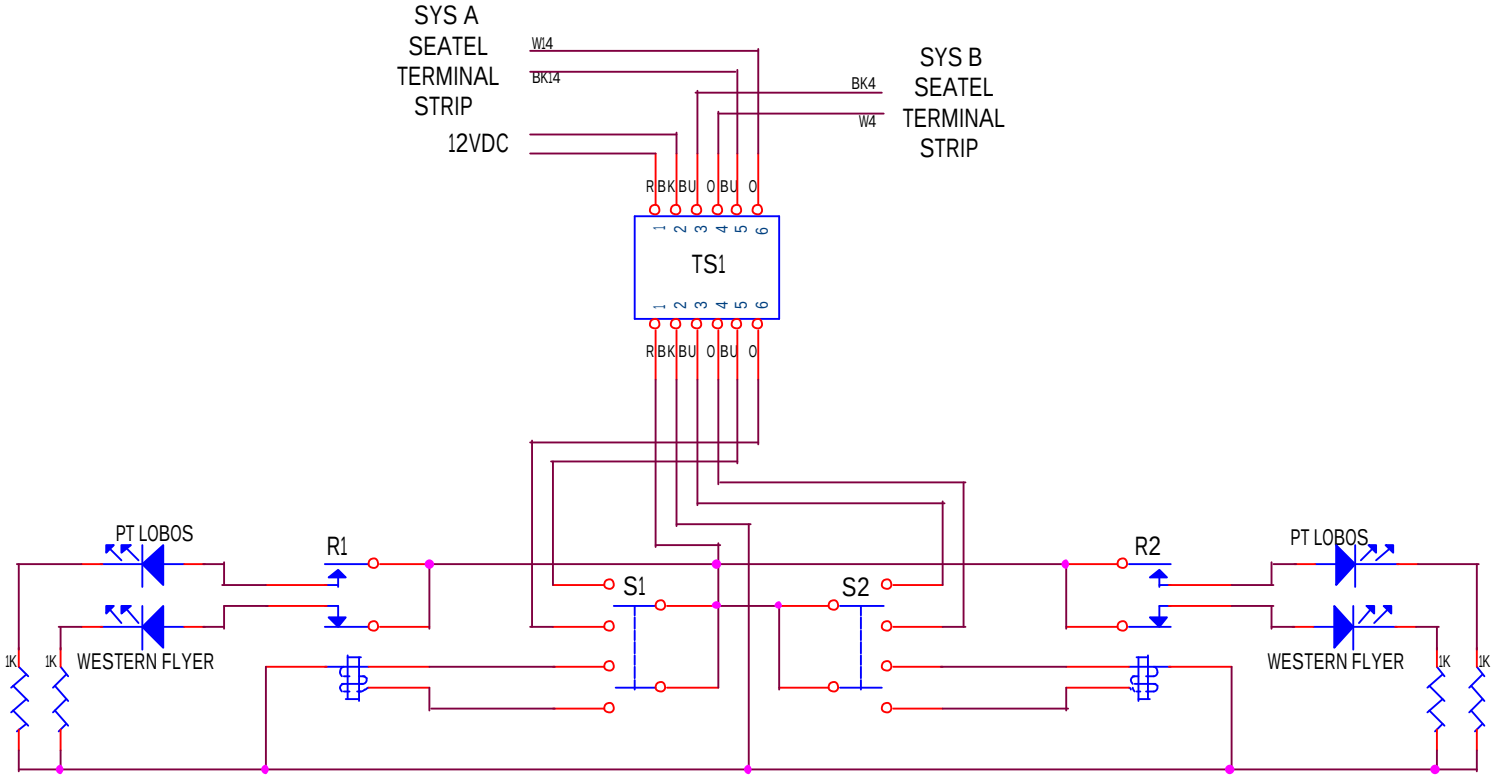

S1,S2 - DPDT MOMENTARY TOGGLE SWITCH
R1,R2 - 2P 12VDC LATCHING RELAY
TB1 - 6 POSITION TERMINAL STRIP

MT TORO 6 GHz FILTER SWITCH