REVISIONS		
	INITIAL RELEASE	5/9/2012

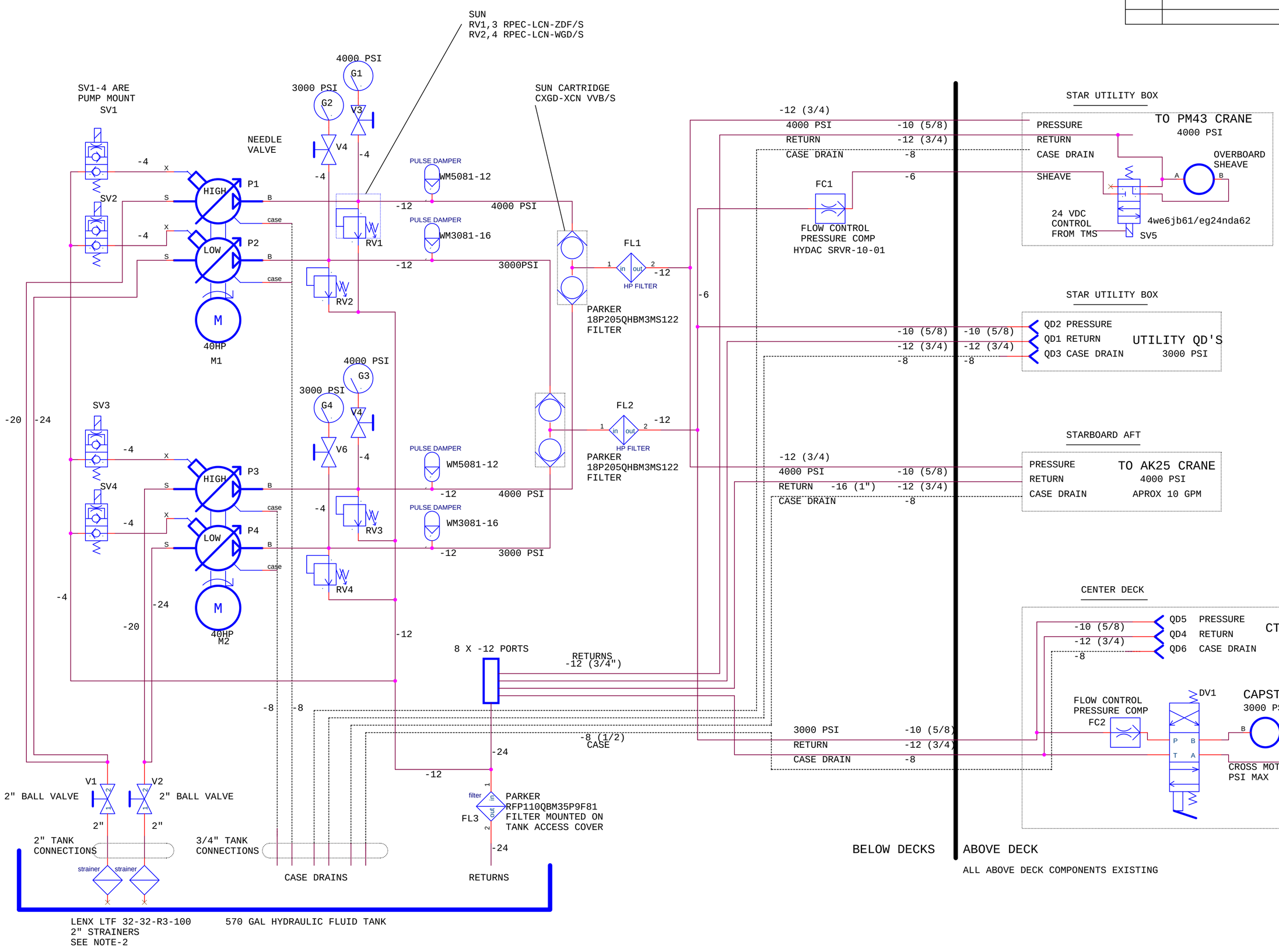

NOTES:

3 SEE HPU ARRANGEMENT DIAGRAM FOR HUP PARTS LOCATIONS
2 REMOVE LENZ STRAINERS IF TELUS-68 FLUID IS USED
1 SEE XL BILL OF MAT FOR PART NUMBERS

DRAWN C OKUDA 5/9/2012	Title R/V RACHEL CARSON HYDRAULIC SYSTEM	
CHECKED	Size C / Document Number 10020854	Rev -
	Date: Wednesday, May 09, 2012	Sheet 1 of 2