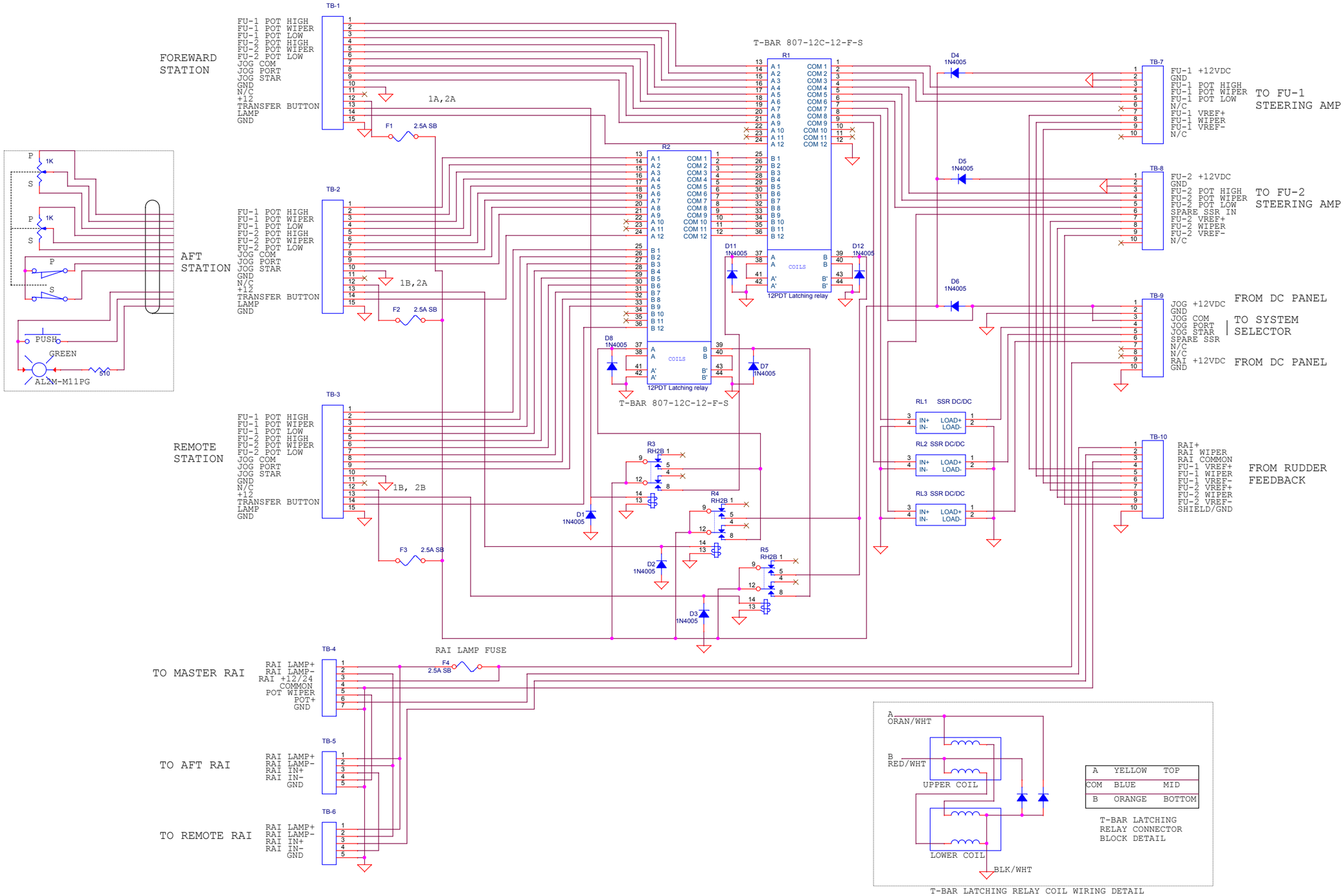

2 EACH, T-BAR 807-12C-12-F-S 12PDT LATCHING RELAY
2 EACH, T-BAR 88601-18C CONNECTORS
3 EACH, IDEC RH2B-DC12V DPDT RELAY
3 EACH, IDEC SH2B-05 RELAY SOCKET
6 EACH, 1N4005 DIODES
4 EACH, 3AG 2.5 AMP SLOW BLOW FUSE 1TL1-3
3 EACH, CRYDOM DR06D12 12A DC SSR

2/27/2013

R/V RACHEL CARSON			
Title	RV RACHEL CARSON STEERING RELAY BOX		
Size C	Document Number <Doc>		Rev -
Date: Thursday, April 04, 2013	Sheet 3 of 10		