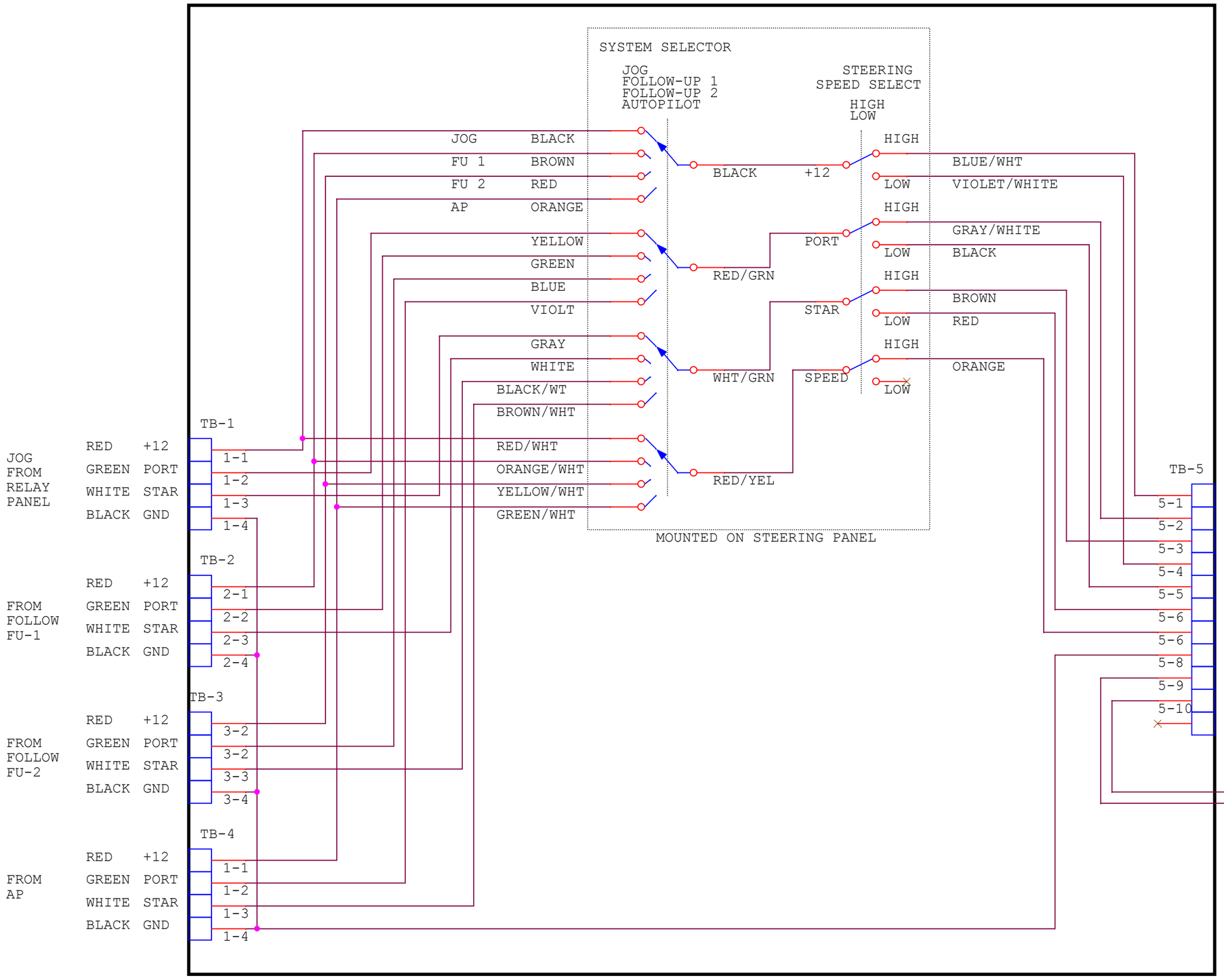

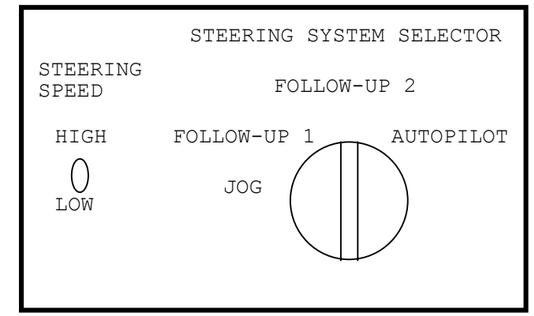

TO SV JUNCTION BOX

+12 HIGH SPEED	ORANGE
PORT HIGH SPEED	RED/BLACK
STAR HIGH SPEED	GREEN/BLACK
+12 LOW SPEED	WHITE
PORT LOW SPEED	RED
STAR LOW SPEED	GREEN
HIGH/LOW SEL SV	ORANGE/BLACK
HIGH/LOW SEL SV GND	BLACK
HYD TANK LELVE ALARM SENS	WHITE
HYD TANK LELVE ALARM SENS	BLUE

RED
BLACK
HYD TANK LELVE ALARM SENSOR TO PORT ALARM PANEL

4/3/2013

R/V RACHEL CARSON

Title: STEERING SYSTEM SELECTOR PANEL

Size: B | Document Number: <Doc> | Rev: -

Date: Thursday, April 04, 2013 | Sheet 4 of 10