REVISIONS			
SYM.	DESCRIPTION	DATE	APPROVED
1	ISSUED FOR REVIEW	10/28/03	
2	REVISED PER SHIPYARD COMMENTS	11/5/03	

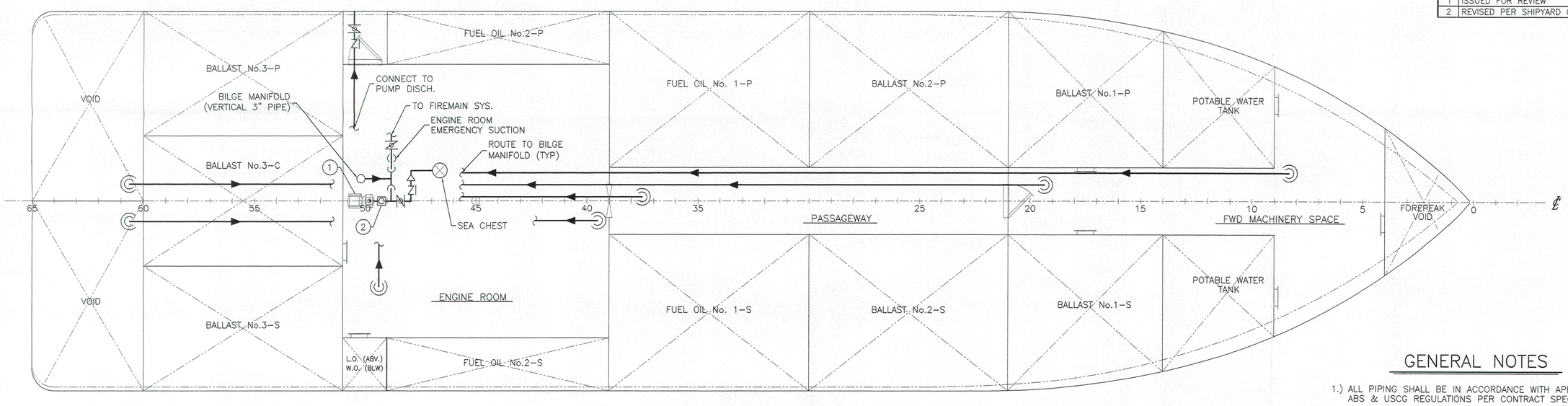

HOLD PLAN

GENERAL NOTES

1.) ALL PIPING SHALL BE IN ACCORDANCE WITH APPLICABLE ABS & USCG REGULATIONS PER CONTRACT SPECIFICATIONS.

2.) PIPING SHALL BE PROPERLY SUPPORTED AND BE ARRANGED SUCH THAT IT IS NOT NORMALLY USED AS A STEP OR RAIL.

3.) DECK AND BULKHEAD PENETRATIONS SHALL BE REINFORCED WITH DOUBLER PLATES IN ACCORDANCE WITH ABS RULES.

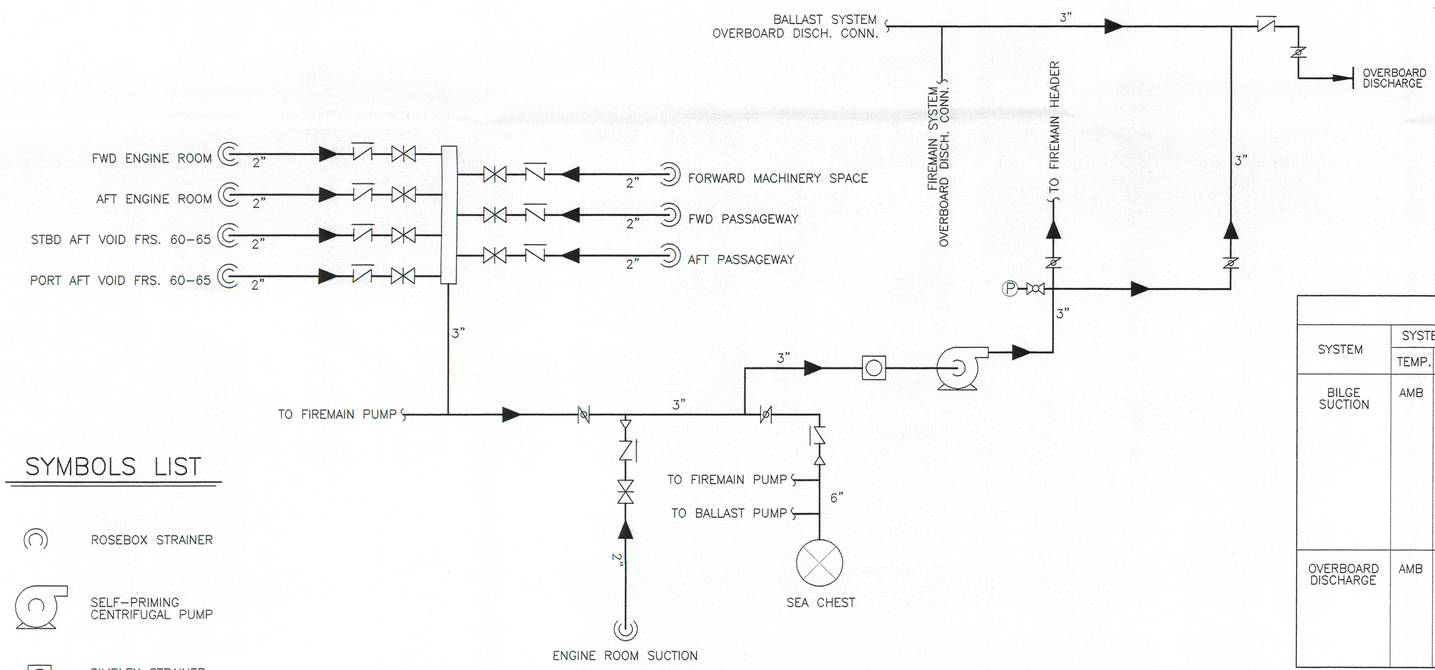

BILGE SYSTEM SCHEMATIC

EQUIPMENT LIST

ITEM NO.	QTY.	DESCRIPTION	MODEL NO.
1	1	SELF-PRIMING CENTRIFUGAL PUMP, 3"x3", 480V, 3-PH, 7.5 HP, CAPABLE OF 150 GPM @ 50' HEAD	BARNES MODEL 15CCE
2	1	3" SIMPLEX STRAINER	–

PIPING MATERIAL SCHEDULE

SYSTEM	SYSTEM CONDITIONS			VALVES				PIPE		FITTINGS	
	TEMP.	MAX PRESS.	OPER. PRESS.	SIZE	TYPE	TRIM	BODY	SIZE	MATERIAL SPECIFICATIONS	TYPE	MATERIAL SPECIFICATIONS
BILGE SUCTION	AMB	–	–	ALL	BUTTERFLY, LUG-TYPE	STAINLESS STEEL	CAST IRON ASTM A-126	ALL	SCH 40, SMLS BLK STEEL, ASTM A-106 GR.B	FLG.	F.S. ASTM A-105 GR.II 150lb. S.O., R.F.
				2"	CHECK, SWING TYPE, THD.	BRONZE ASTM B-62	BRONZE ASTM B-62				
				2"	GATE, RISING STEM, THD.	BRONZE ASTM B-62	BRONZE ASTM B-62			PIPE	BUTT-WELD, WPC ASTM A-105, GR.II
OVERBOARD DISCHARGE	AMB	60	40	3"	BUTTERFLY, LUG-TYPE	STAINLESS STEEL	CAST IRON ASTM A-126	ALL	SCH 80, SMLS BLK STEEL, ASTM A-106 GR.B		
				3"	CHECK, SWING TYPE, THD.	BRONZE ASTM B-62	BRONZE ASTM B-62			UNION	F.S. SOCKET WELD, ASTM A-105, GR.II , 3000lb. M95-SP-83

SYMBOLS LIST

- ROSEBOX STRAINER
- SELF-PRIMING CENTRIFUGAL PUMP
- SIMPLEX STRAINER
- PRESSURE GAUGE
- GATE VALVE
- CHECK VALVE
- BUTTERFLY VALVE
- REDUCER

NO.	TITLE	DWG. NO.

REFERENCES

THIS DRAWING, DESIGN, CONCEPT AND SPECIFICATIONS ARE THE PROPERTY OF STERLING MARINE, LTD. AND ARE FURNISHED ON A CONFIDENTIAL BASIS WITH AN EXPRESSED UNDERSTANDING THAT THEY WILL NOT BE COPIED IN ANY MANNER, USED FOR MANUFACTURE, SOLD, TRANSFERED NOR USED TO THE DETRIMENT OF SAID COMPANY WITHOUT WRITTEN PERMISSION.

STERLING MARINE, LTD.

DRAWN BY: T. CARVER | CHECKED BY:
APPROVED BY: | DWG. NO.
DATE: 28 OCT 2003 | CONTRACT NO.
LaFORCE
APPROVED:
DATE:

STERLING MARINE, LTD.
1150 SHADY LANE
GULF BREEZE, FL 32563

136 FT. OFFSHORE SUPPLY VESSEL
(LaFORCE SHIPYARD, INC. – HULL 137/138)

BILGE SYSTEM

SIZE: D | PROJECT NO.: – | DWG. NO.: 137-C660-01 | REV.: 2
SCALE: 3/16" = 1'-0" | SHEET 1 OF 1