REVISIONS			
SYM.	DESCRIPTION	DATE	APPROVED
1	ISSUED FOR REVIEW	11/5/03	
2	REVISED PER SHIPYARD COMMENTS	11/10/03	

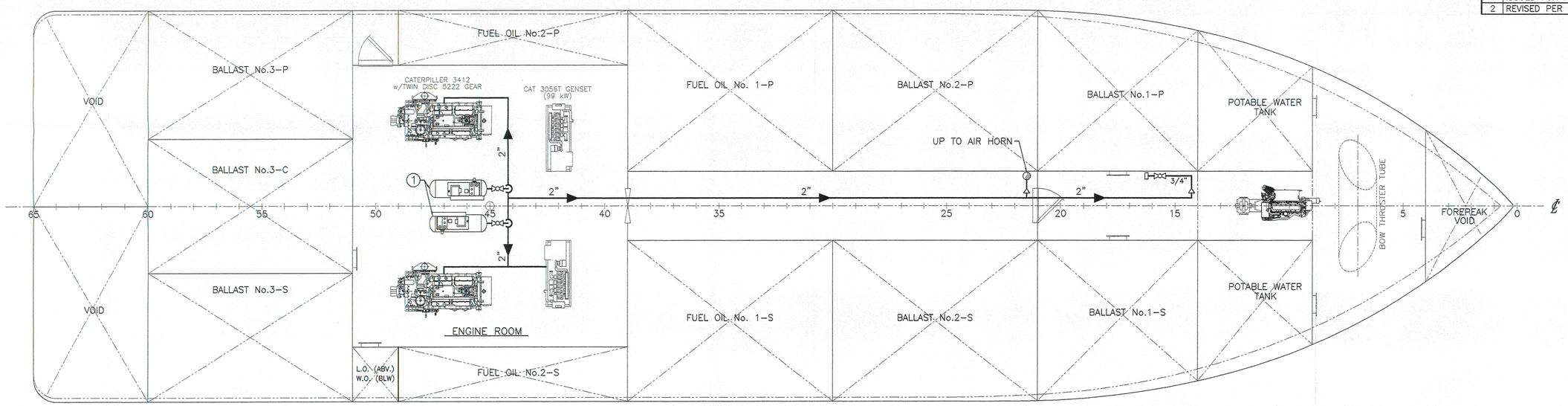

HOLD PLAN

GENERAL NOTES

1.) ALL PIPE WHICH PENETRATES A TANK BOUNDARY, SHELL PLATE, OR I.W.O. A W.T. BULKHEAD SHALL BE SCH. 80.

2.) THE COMPRESSOR SHALL BE SET TO CUT IN AT 95 PSIG AND CUT OUT AT 135 PSIG.

3.) ALL NECESSARY UNIONS, FLANGES, FITTINGS, ETC., SHALL BE PROVIDED TO COMPLETE INSTALLATION IF NOT SHOWN OR LISTED.

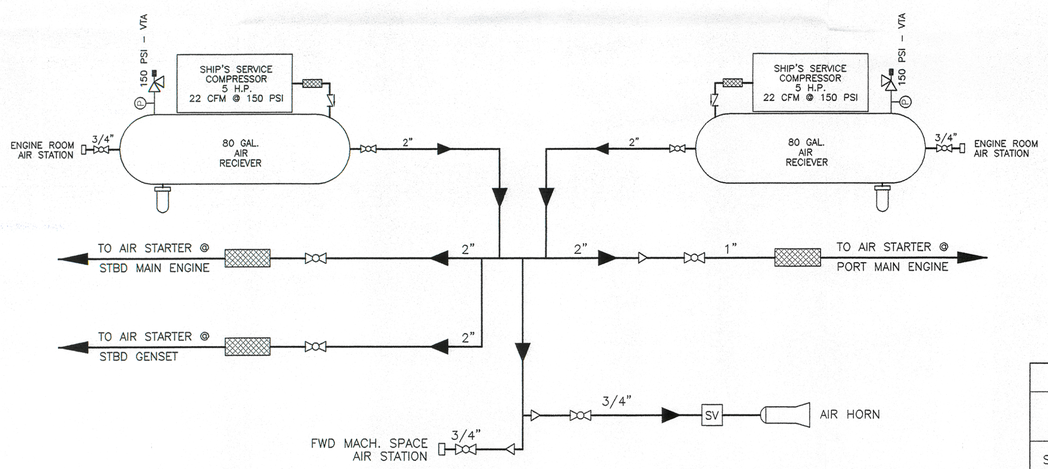

COMPRESSED AIR SCHEMATIC

SYMBOLS LIST

- PRESSURE GAUGE
- SWITCH
- CHECK VALVE
- BALL VALVE
- FLEXIBLE HOSE
- CONDESATE DRAIN
- PRESSURE RELIEF VALVE
- QUICK DISCONNECT FOR AIR HOSE
- PRESSURE REDUCING STATION
- REDUCER

EQUIPMENT LIST

ITEM NO.	QTY.	DESCRIPTION	MODEL NO.
1	1	AIR COMPRESSOR, 5 H.P., 8A AT 480V, 22 CFM @ 150 PSIG, w/80 GAL HORIZONTAL RECIEVER, PRESS. GAUGE, & RELIEF VALVE SET AT 150 PSI	QUINCY RT-5.0-80
2	A.R.	FLEXIBLE HOSE; USCG APPROVED	–

PIPING MATERIAL SCHEDULE

SYSTEM	SYSTEM CONDITIONS			VALVES				PIPE		FITTINGS	
	TEMP.	MAX PRESS.	OPER. PRESS.	SIZE	TYPE	TRIM	BODY	SIZE	MATERIAL SPECIFICATIONS	TYPE	MATERIAL SPECIFICATIONS
SHIP'S SERVICE COMPRESSED AIR SYSTEM	100°F	200	150	ALL	CHECK, SWING TYPE, FLGD.	BRONZE ASTM B-62	BRONZE ASTM B-62	ALL	SCH 40, GALV. STEEL, ASTM A-105	FLG.	F.S. ASTM A-105 GR.II 150lb. S.O., R.F.
										PIPE	BUTT-WELD, WPC ASTM A-105, GR.II
				ALL	BALL VALVE THD.	BRONZE ASTM B-62	BRONZE ASTM B-62			UNION	F.S. SOCKET WELD, ASTM A-105, GR.II , 3000lb. M95-SP-83

NO.	TITLE	DWG. NO.

REFERENCES

THIS DRAWING, DESIGN, CONCEPT AND SPECIFICATIONS ARE THE PROPERTY OF STERLING MARINE, LTD. AND ARE FURNISHED ON A CONFIDENTIAL BASIS WITH AN EXPRESSED UNDERSTANDING THAT THEY WILL NOT BE COPIED IN ANY MANNER, USED FOR MANUFACTURE, SOLD, TRANSFERED NOR USED TO THE DETRIMENT OF SAID COMPANY WITHOUT WRITTEN PERMISSION.

STERLING MARINE, LTD.
DRAWN BY: T. CARVER
CHECKED BY:
APPROVED BY:
DWG. NO.
DATE: 01 NOV 2003
CONTRACT NO.
LaFORCE
APPROVED:
DATE:

STERLING MARINE, LTD.
1150 SHADY LANE
GULF BREEZE, FL 32563

136 FT. OFFSHORE SUPPLY VESSEL
(LaFORCE SHIPYARD, INC. – HULL 137/138)

COMPRESSED AIR SYSTEM

SIZE	PROJECT NO.	DWG. NO.	REV.
D	–	137-C690-01	2

SCALE: 3/16" = 1'-0" SHEET 1 OF 1