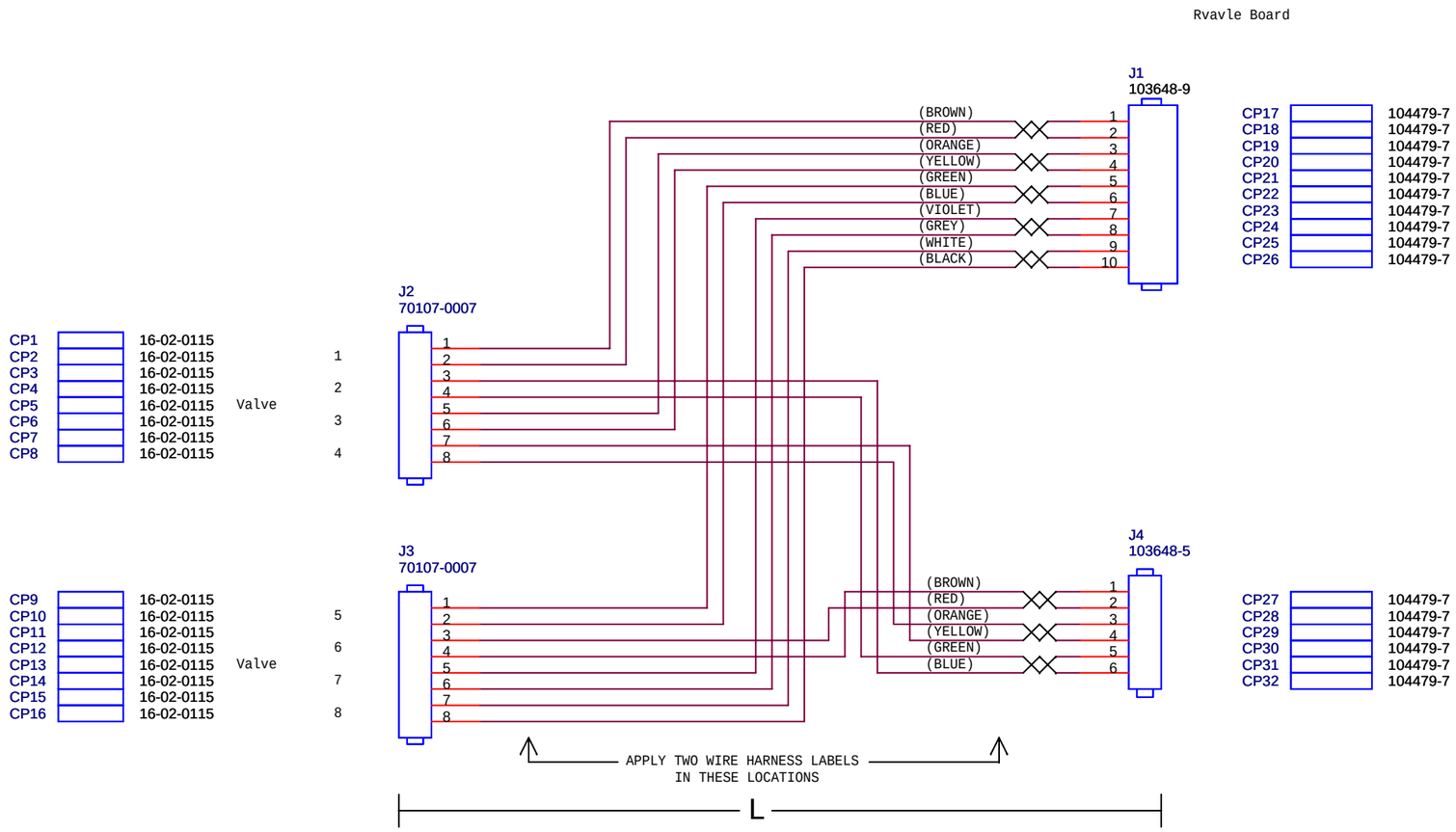

LOCATION	WIRE HARNESS LABEL	"L"	TOLERANCE
COLLECTION	WH8	24"	-0.20"/+0.50"
PROCESSING	WH26	35"	-0.20"/+0.50"

*22AWG MIL SPEC TYPE "E" WIRE

MONTEREY BAY AQUARIUM RESEARCH INSTITUTE
7700 SANDHOLDT ROAD
MOSS LANDING, CA 95039
(831) 775-1700 www.mbari.org

Copyright MBARI 2000

Title **Valve Manifold Harness** | Number -

Size **B** | Engineer **Scott Jensen** | Layout - | Filename **ESP_System** | Rev **0.0.0**

Date: Wednesday, June 04, 2008 | Sheet 1 of 6