Vanalog is +5V from the Tattletale onboard regulator, and is controlled by a switch on the Analog Module that senses the presence of the Analog Reference voltage. Whenever the A/D convertor on the Tattletale is active, Vanalog will be enabled.

BuffRef is a buffered replica of the 4.096V reference voltage internal to the A/D convertor on the Tattletale.

Resistors Rx01 through Rx08, and Cx01 are application dependent, and not all will be installed in any particular situation.

Gain	Rx05
5	omit
10	40.2k
20	13.3k
50	4420
100	2100
200	1020
500	402
1000	200
2000	100
5000	40.2
10000	20
nearest 1% value	

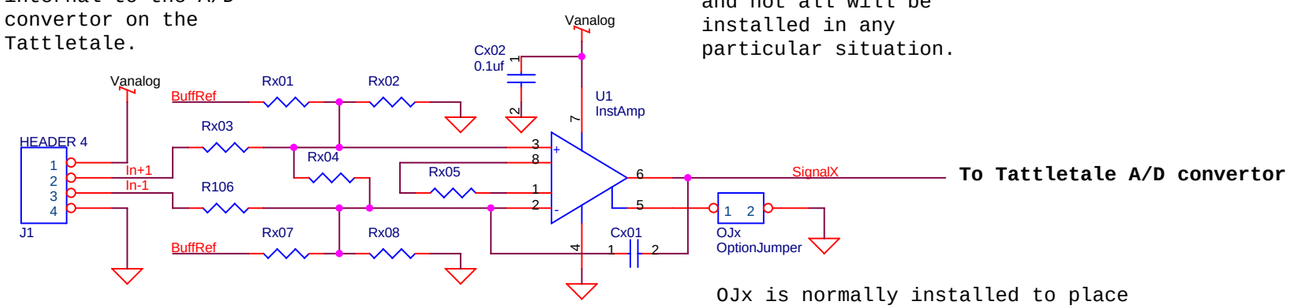

To Tattletale A/D convertor

SignalX = (V+IN - V-IN)Gain

Gain = 5 + (200k/Rx05)

Rx05 is the gain setting resistor for the instrumentation amplifier.

OJx is normally installed to place the output reference level at ground potential. An externally generated voltage from a low impedance source may be applied here to raise the reference level above ground.

Dave Wright / Electronic Systems Design

1840 41st. Av. #102-328
Capitola, CA. 95010
davewrightsplace@earthlink.net

Title
Analog Module Configuration

Size	Document Number	Rev
B	**Unassigned**	**A**

Date: Monday, July 23, 2001 Sheet 1 of 1