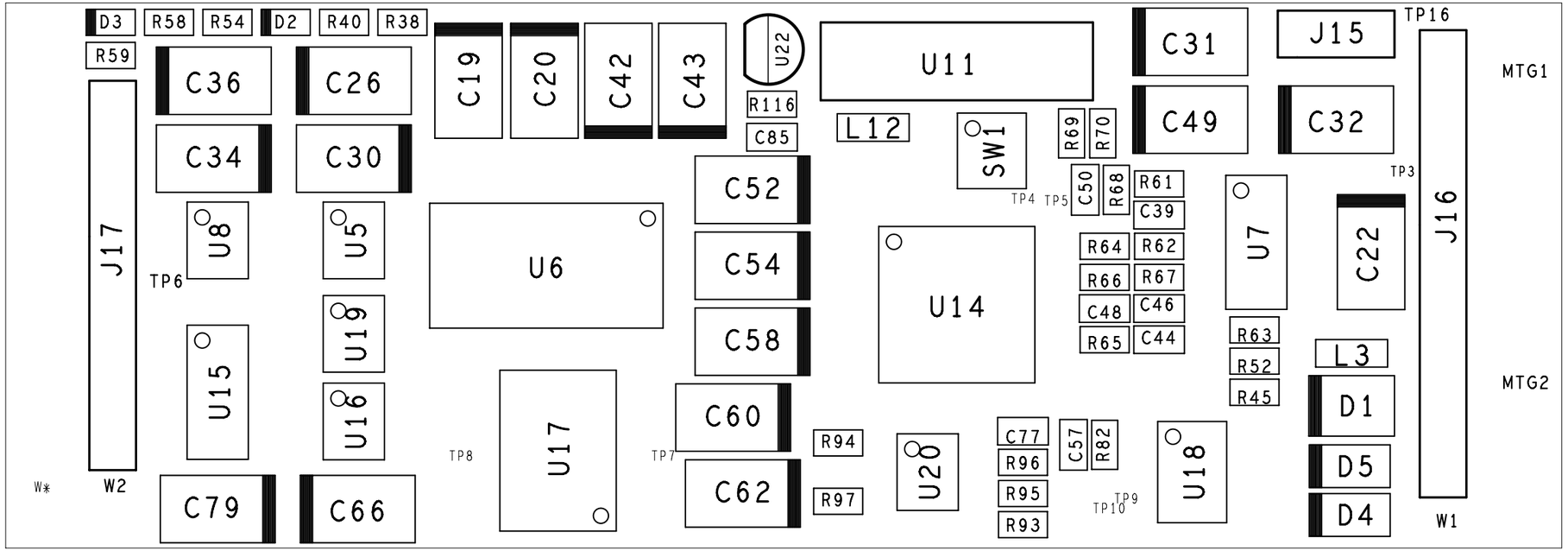
D3
R58
R54
D2
R40
R38
R59
C36
C26
C19
C20
C42
C43
U22
U11
C31
J15
TP16
MTG1
C34
C30
R116
C85
L12
SW1
R69
R70
C49
C32
J17
U8
U5
C52
TP4
TP5
C50
R68
R61
C39
TP3
TP6
U6
C54
U14
R64
R62
U7
C22
J16
U19
R66
R67
U15
C58
C48
C46
R65
C44
R63
R52
R45
L3
MTG2
U16
C60
D1
U17
TP8
TP7
R94
U20
C77
R96
R95
R93
C57
R82
U18
D5
D4
W*
W2
C79
C66
C62
R97
TP9
TP10
W1

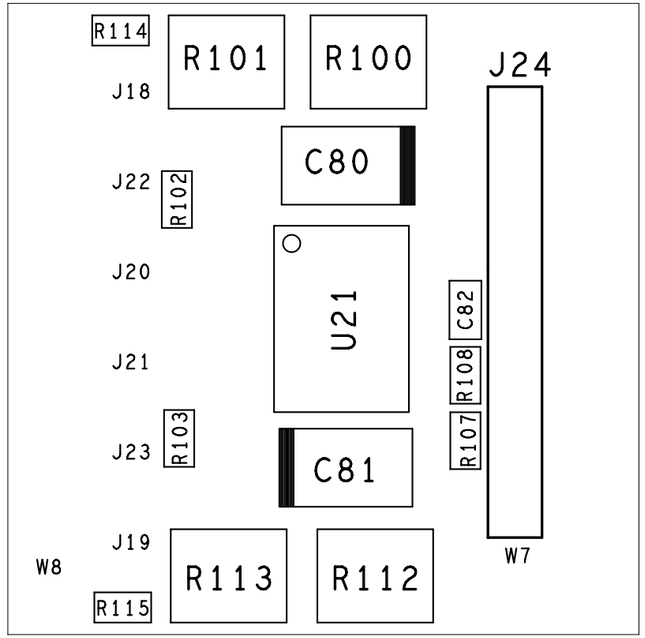
R114
R101
R100
J24
J18
C80
J22
R102
J20
U21
C82
J21
R108
R107
J23
R103
C81
J19
W8
R113
R112
W7
R115