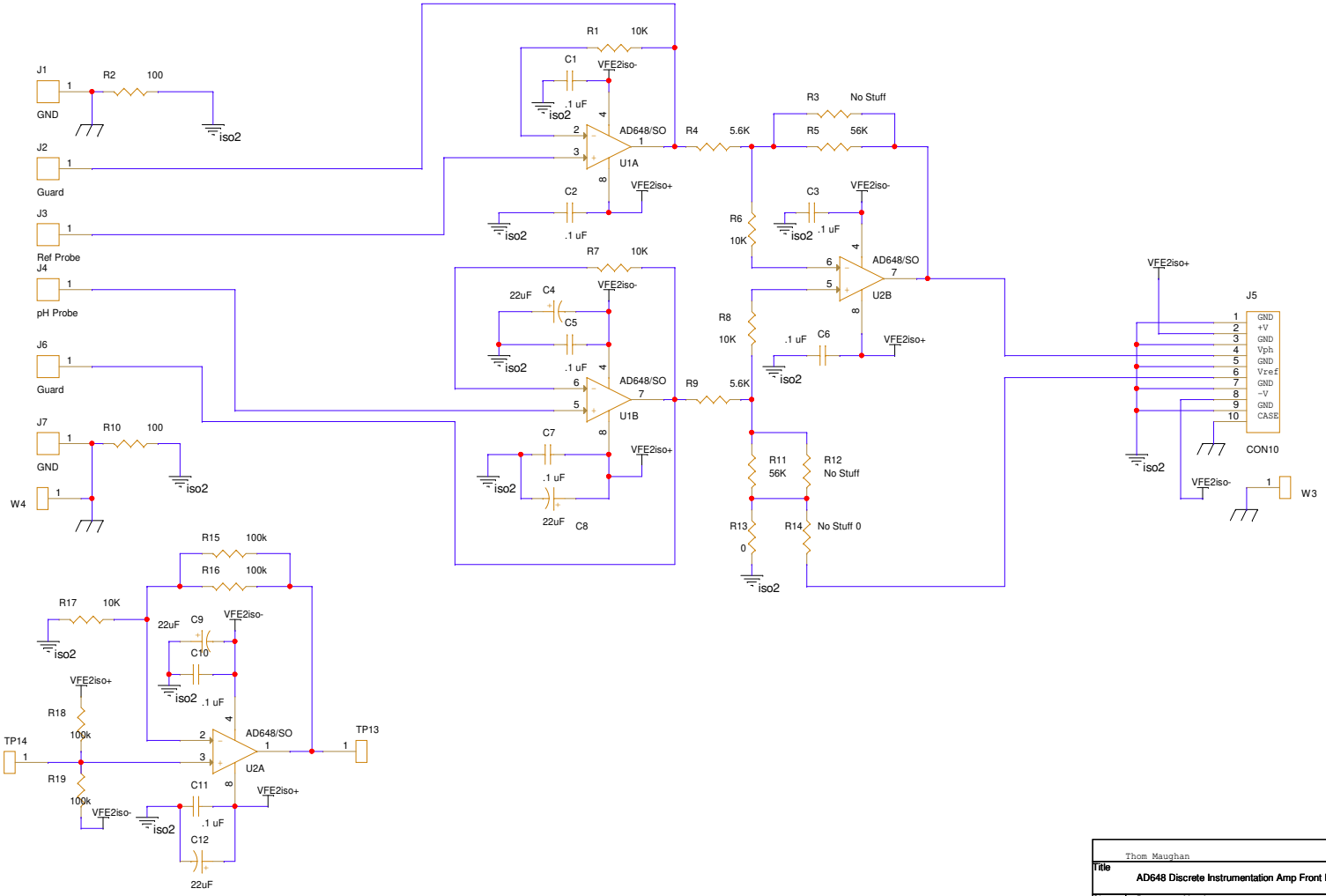

Thom Maughan

Title: AD648 Discrete Instrumentation Amp Front End

Size	Document Number	Rev
B	10020229	1.0

Date: Tuesday, April 08, 2025 Sheet 1 of 4

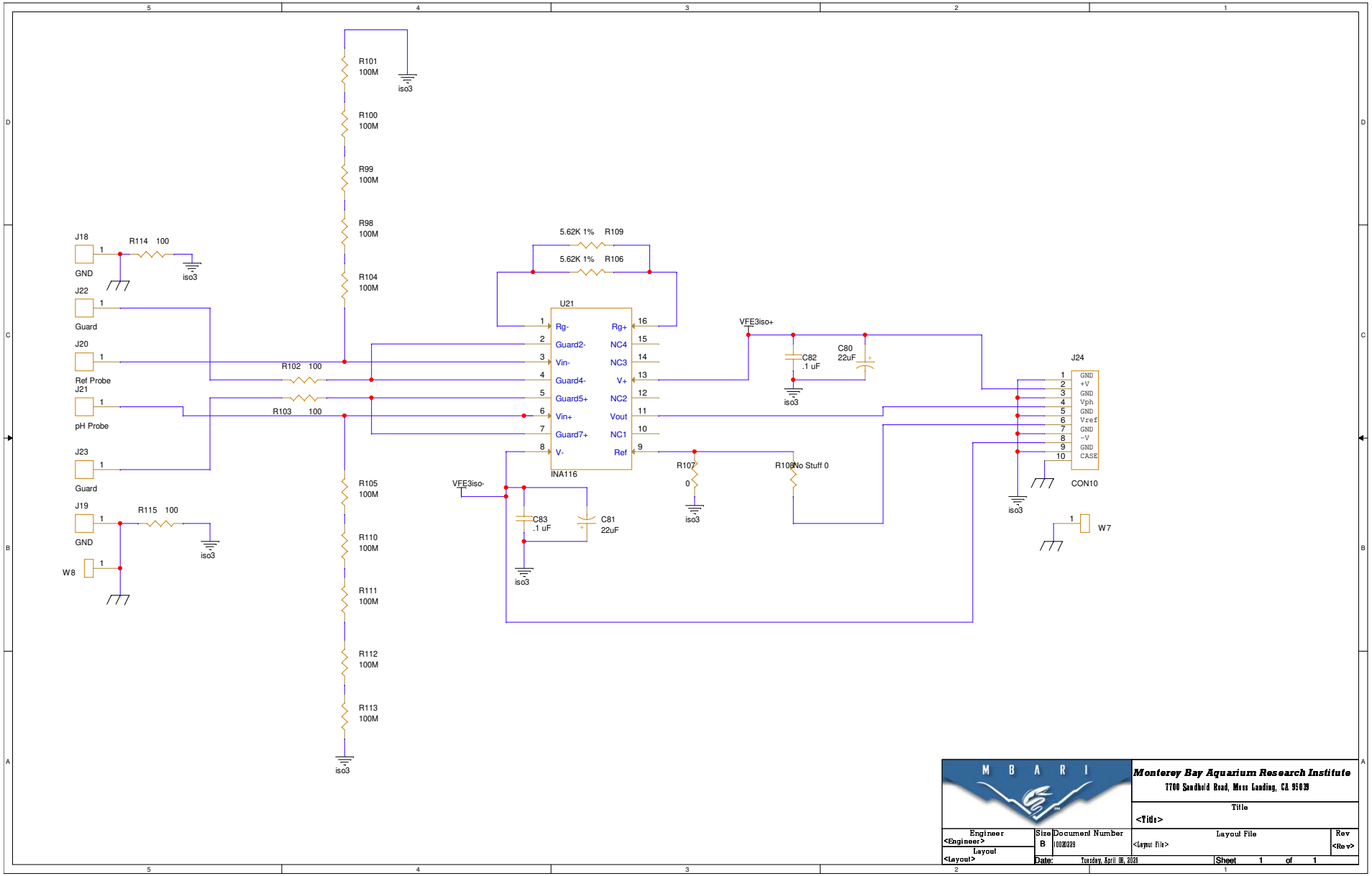

M B A R I	Monterey Bay Aquarium Research Institute 7700 Sandholt Road, Moss Landing, CA 95039		
	Title <Title>		
Engineer <Engineer>	Size B	Document Number 10020329	Layout File <Layout File>	Rev <Rev>
Layout <Layout>	Date: Tuesday, April 18, 2023	Sheet 1 of 1		

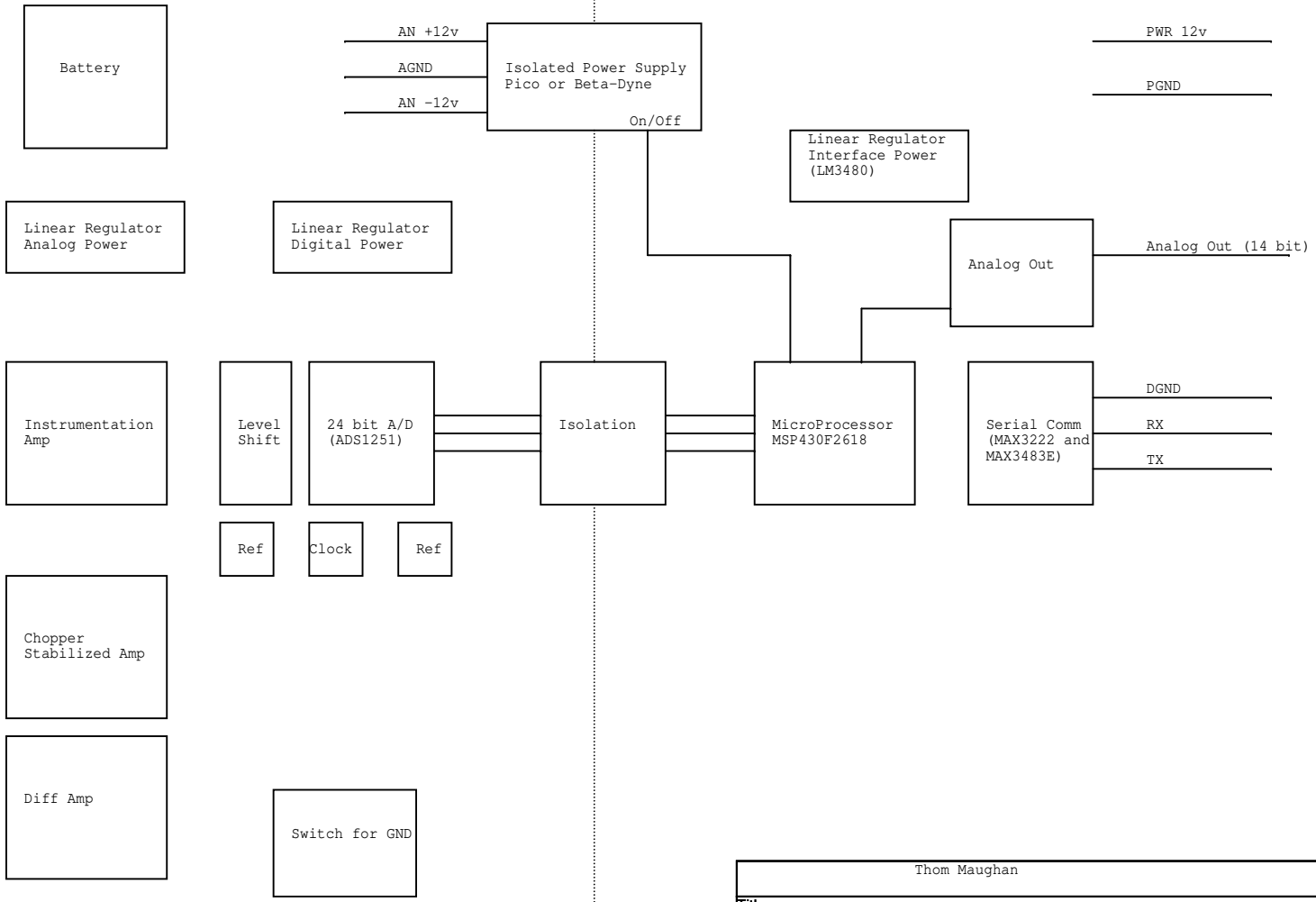

Thom Maughan

Title
High Resolution pH Meter

Size	Document Number	Rev
A	<Doc>	1.0

Date: Tuesday, April 08, 2025 Sheet 2 of 4

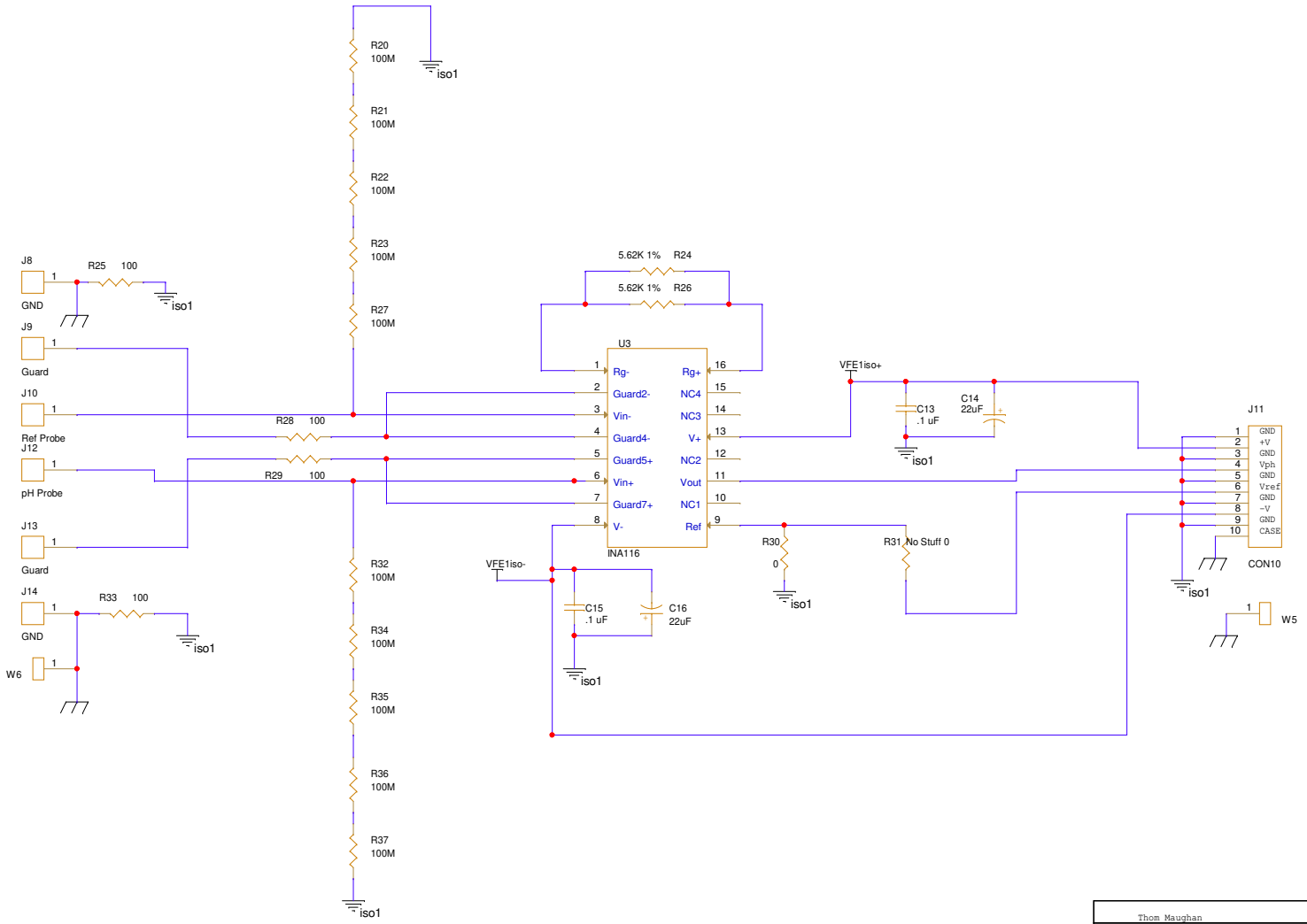

Thom Maughan

Title: INA116 Instrumenation Amp Front End

Size	Document Number	Rev
B	10020229	1.0

Date: Tuesday, April 08, 2025 Sheet 3 of 4

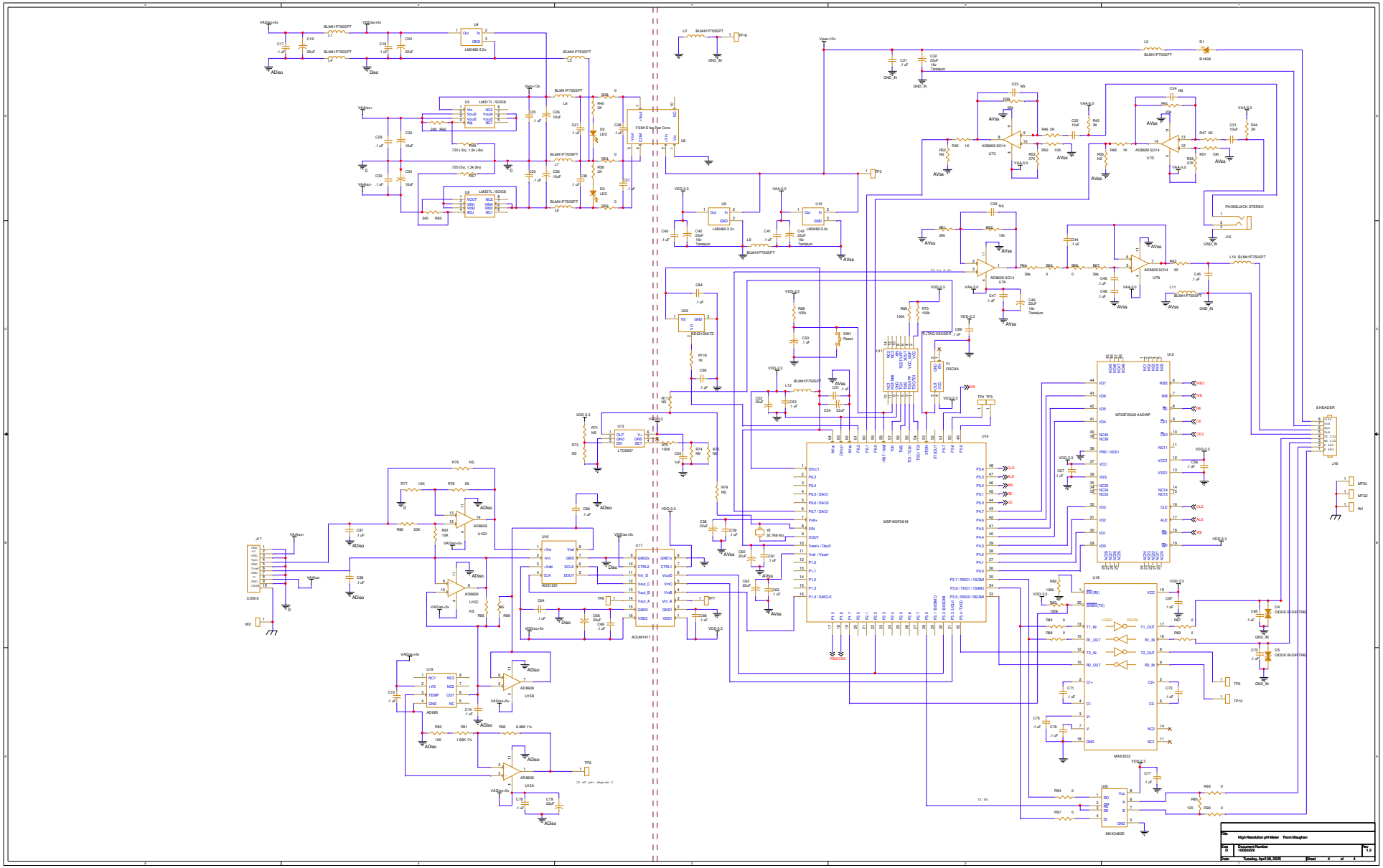
MSP430F2618
MF29F32G08 AADWP
MAX3232
MAX3483E
ADUM1411
ADS1251
AD8609
LM3480-5.0v
LM3480-3.3v
LM317L / SOIC8
FSMRD Isp Pwr Conv
PHONEJACK STEREED
B HEADER
CON10
J17
J16
J15
J14
U12
U14
U16
U20
U17
U19
U15A
U15B
U15C
U15D
U7A
U7B
U7C
U7D
U4
U5
U6
U8
U9
U10
U13
U22
U11
U18
Y1
OSC8A
Y6
32.768 khz
SW1
Reset
JTAG HEADER
LTC6997
AD680
CODE BI-DIRTRIG
D4
D5
D1
B140B
D2
LED
D3
LED
Vcc+12v
VDD3.3
VAA5.0
VDDiso+5v
VAAiso+5v
ADiso
Diso
AVss
GND_IN
10 mV per degree C
Title
High Resolution pH Meter
Thom Maughen
Size
B
Document Number
100B0000
Rev
1.2
Date:
Tuesday, April 08, 2025
Sheet
4
of
4