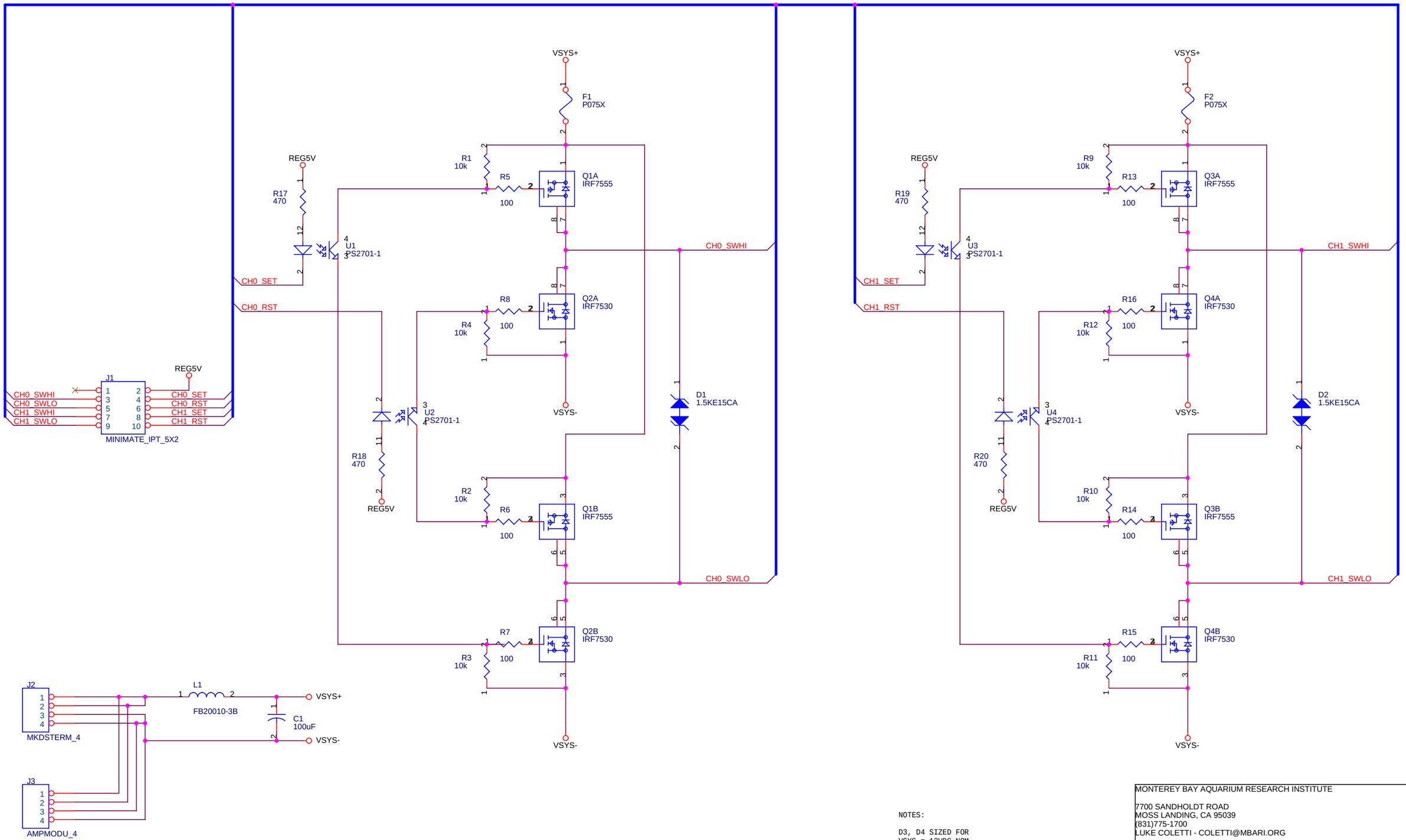

NOTES:

D3, D4 SIZED FOR
VSYS = 12VDC NOM.

MONTEREY BAY AQUARIUM RESEARCH INSTITUTE

7700 SANDHOLDT ROAD
MOSS LANDING, CA 95039
(831)775-1700
LUKE COLETTI - COLETTI@MBARI.ORG

Title: ISOLATED 2 CH LATCHING SOLONOID DRIVER

Size	Document Number	Rev
B	10020432	0

Date: Thursday, December 17, 2009 Sheet 1 of 1