# ARDUINO MEGA 1280 R2 PINOUTS

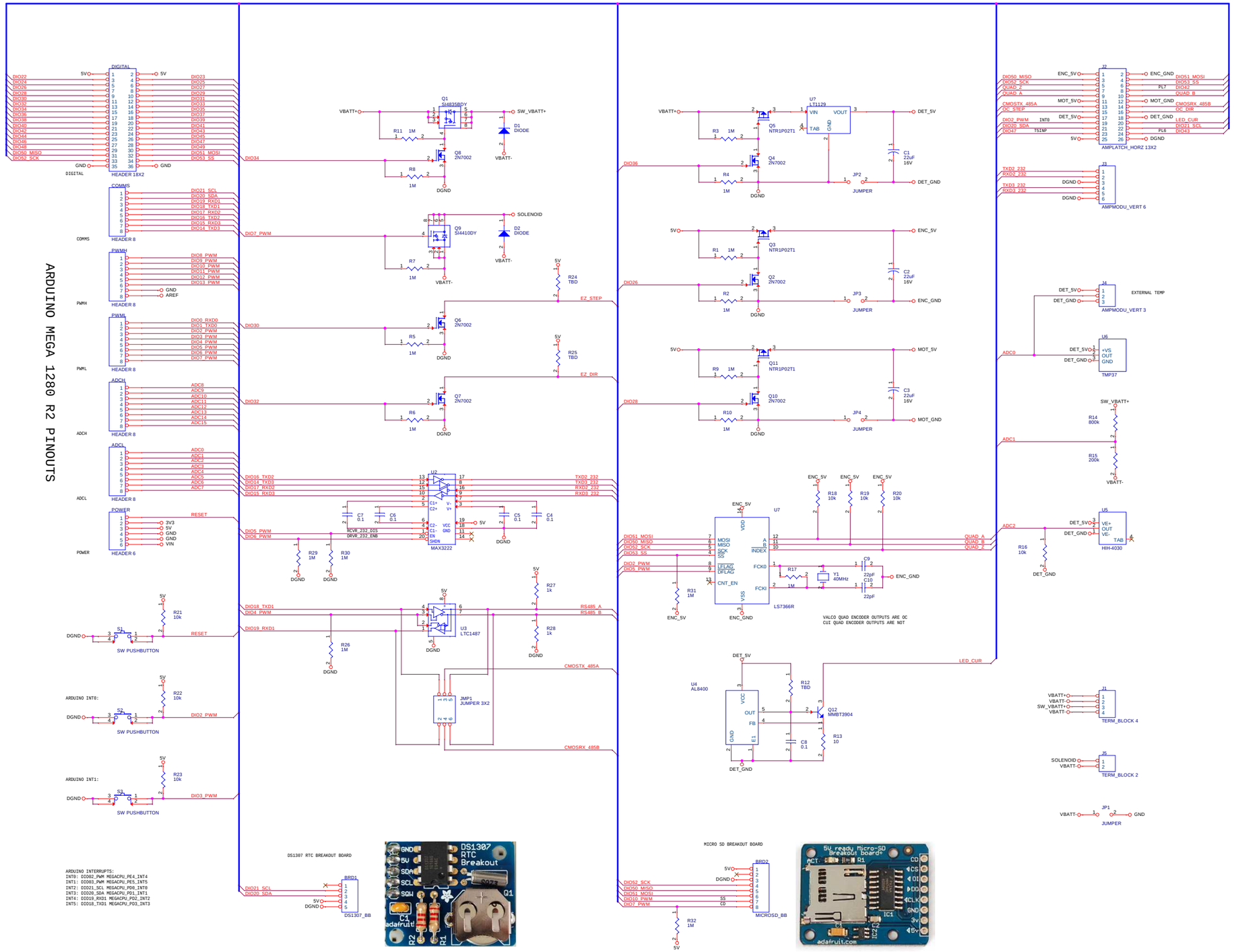


MONTEREY BAY AQUARIUM RESEARCH INSTITUTE
7700 SANDHOLDT ROAD
MOSS LANDING, CA 95039
(831)775-1700
LUKE COLETTI - COLETTI@MBARI.ORG

Title: ARDUINO BASED DIGI-SIA CONTROLLER

| Size | Document Number | Rev |
|---|---|---|
| D | 10020915 | A |

Date: Thursday, November 29, 2012 Sheet 1 of 1