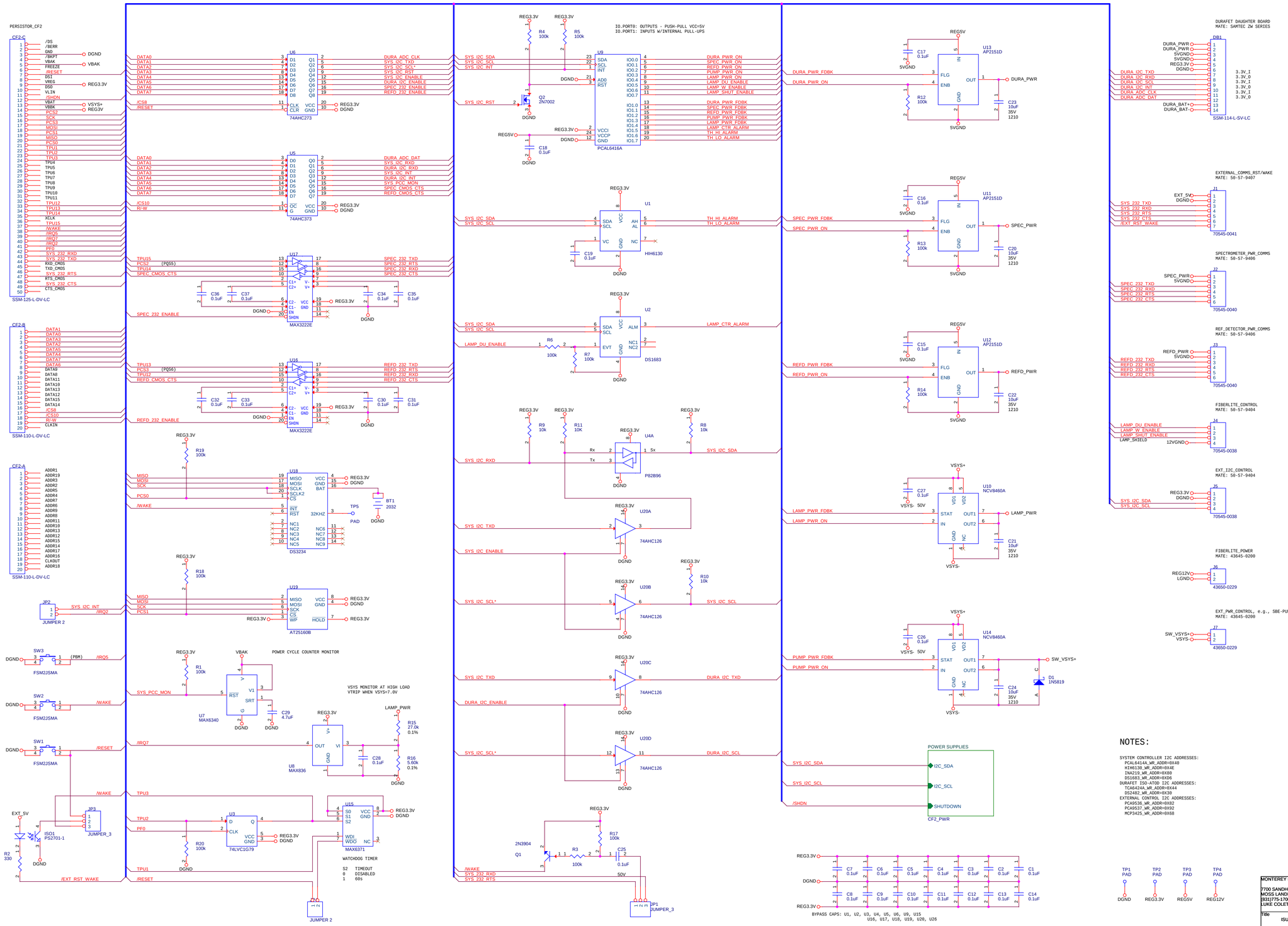
PERSISTOR_CF2
CF2-C
SSM-125-L-DV-LC
CF2-B
SSM-110-L-DV-LC
CF2-A
SSM-110-L-DV-LC
U6
74AHC273
U5
74AHC373
U17
MAX3222E
U16
MAX3222E
U18
DS3234
U19
AT25160B
JP2
JUMPER 2
SW3
SW2
SW1
FSM2JSMA
U7
MAX6340
POWER CYCLE COUNTER MONITOR
VSYS MONITOR AT HIGH LOAD
VTRIP WHEN VSYS=7.6V
U8
MAX836
JP3
JUMPER_3
ISO1
PS2701-1
U3
74LVC1G79
U15
MAX6371
WATCHDOG TIMER
S2 TIMEOUT
0 DISABLED
1 60s
JUMPER 2
U9
PCAL6416A
IO.PORT0: OUTPUTS - PUSH-PULL VCC=5V
IO.PORT1: INPUTS W/INTERNAL PULL-UPS
Q2
2N7002
U1
HIH6130
U2
DS1683
U4A
P82B96
U20A
U20B
U20C
U20D
74AHC126
2N3904
Q1
JP1
JUMPER_3
U13
AP2151D
U11
AP2151D
U12
AP2151D
U10
NCV8460A
U14
NCV8460A
D1
1N5819
POWER SUPPLIES
I2C_SDA
I2C_SCL
SHUTDOWN
CF2_PWR
DURAFET DAUGHTER BOARD
MATE: SAMTEC 2M SERIES
DB1
SSM-114-L-SV-LC
EXTERNAL_COMMS_RST/WAKE
MATE: 50-57-9407
J1
70545-0041
SPECTROMETER_PWR_COMMS
MATE: 50-57-9406
J2
70545-0040
REF_DETECTOR_PWR_COMMS
MATE: 50-57-9406
J3
70545-0040
FIBERLITE_CONTROL
MATE: 50-57-9404
J4
70545-0038
EXT_I2C_CONTROL
MATE: 50-57-9404
J5
70545-0038
FIBERLITE_POWER
MATE: 43645-0200
J6
43650-0229
EXT_PWR_CONTROL, e.g., SBE-PUMP
MATE: 43645-0200
J7
43650-0229
NOTES:
SYSTEM CONTROLLER I2C ADDRESSES:
PCAL6414A_WR_ADDR=0X40
HIH6130_WR_ADDR=0X4E
INA219_WR_ADDR=0X80
DS1683_WR_ADDR=0XD6
DURAFET ISO-ATOD I2C ADDRESSES:
TCA6424A_WR_ADDR=0X44
DS2482_WR_ADDR=0X30
EXTERNAL CONTROL I2C ADDRESSES:
PCA9536_WR_ADDR=0X82
PCA9537_WR_ADDR=0X92
MCP3425_WR_ADDR=0X68
BYPASS CAPS: U1, U2, U3, U4, U5, U6, U9, U15
U16, U17, U18, U19, U20, U26
TP1 PAD DGND
TP2 PAD REG3.3V
TP3 PAD REG5V
TP4 PAD REG12V
MONTEREY BAY AQUARIUM RESEARCH INSTITUTE
7700 SANDHOLDT ROAD
MOSS LANDING, CA 95039
(831)775-1700
LUKE COLETTI - COLETTI@MBARI.ORG
Title
ISUS/DURAFET CF2 BASED CONTROLLER
Size D
Document Number 10021035
Rev A
Date: Wednesday, February 19, 2014
Sheet 1 of 2

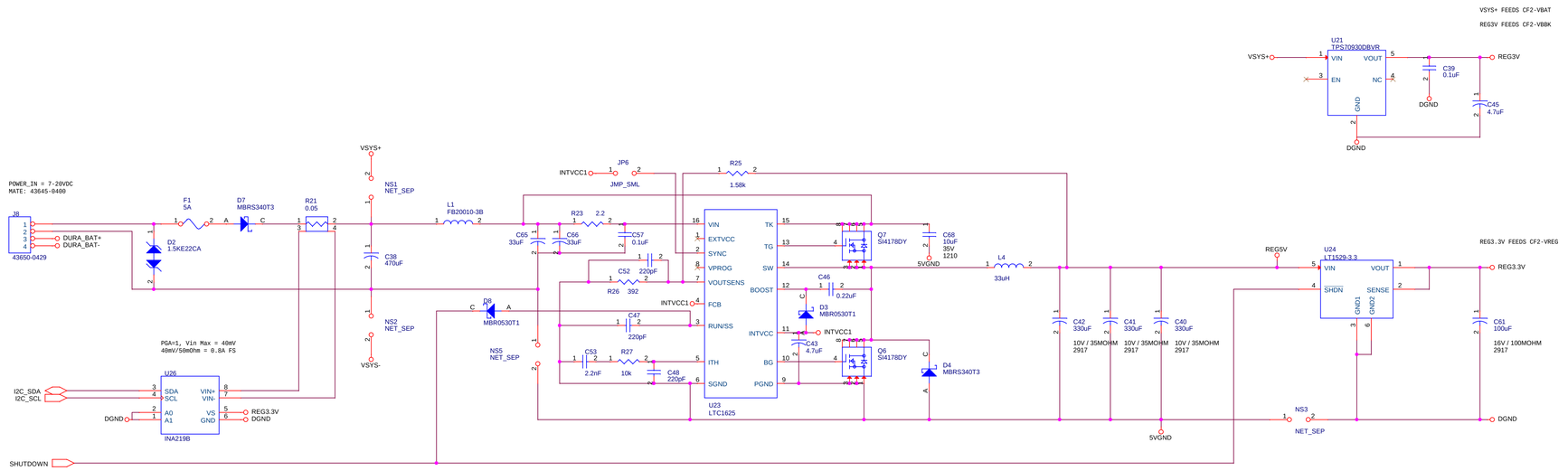

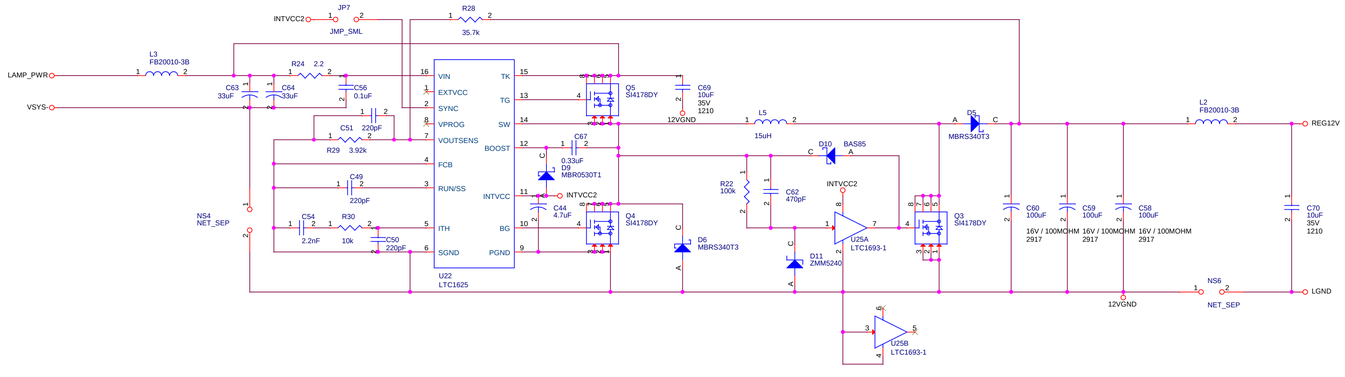

MONTEREY BAY AQUARIUM RESEARCH INSTITUTE 7700 SANDHOLDT ROAD MOSS LANDING, CA 95039 (831)775-1700 LUKE COLETTI - COLETTI@MBARI.ORG		
Title ISUS/DURAFET CF2 BASED CONTROLLER		
Size D	Document Number 10021035	Rev A
Date: Friday, February 14, 2014	Sheet 2 of 2	