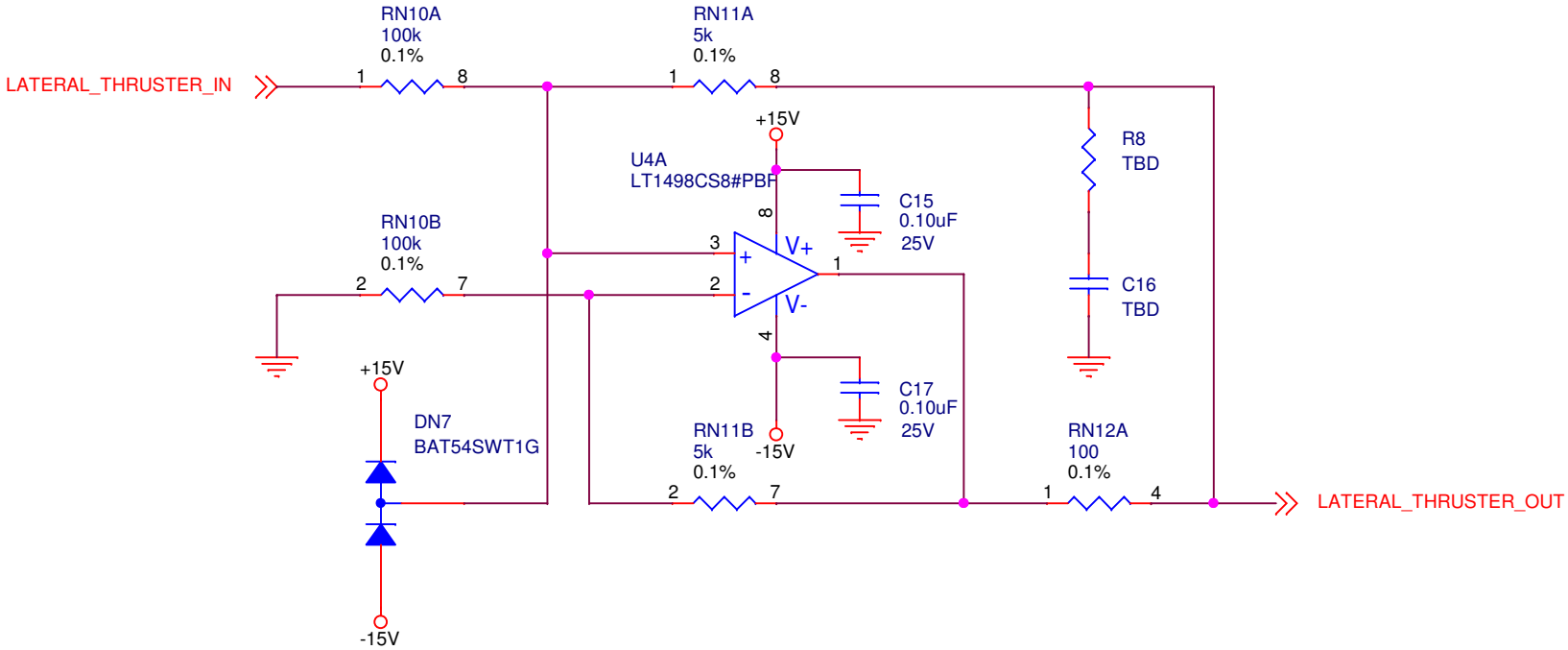

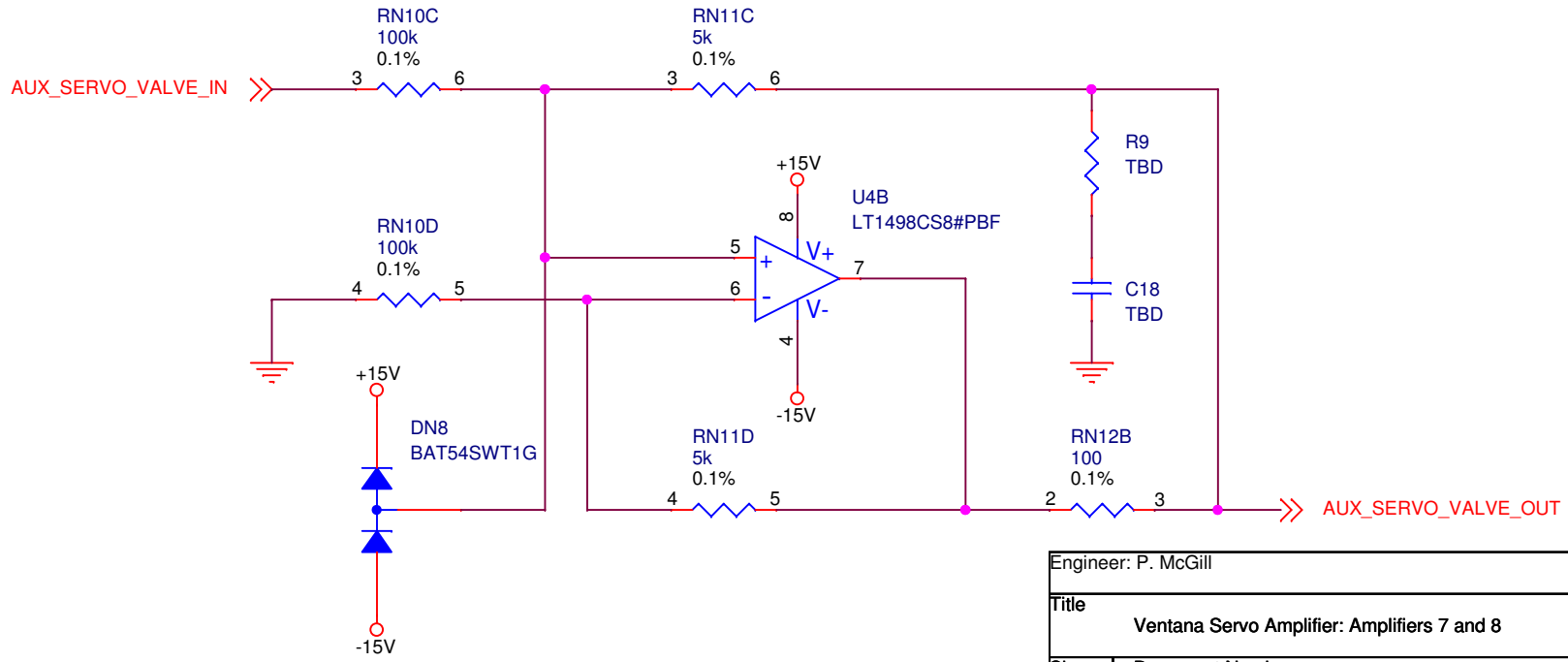

Engineer: P. McGill		
Title: Ventana Servo Amplifier: Amplifiers 7 and 8		
Size: A	Document Number: 11021201	Rev: 1.0.0
Date: Monday, November 02, 2015	Sheet 5 of 6	