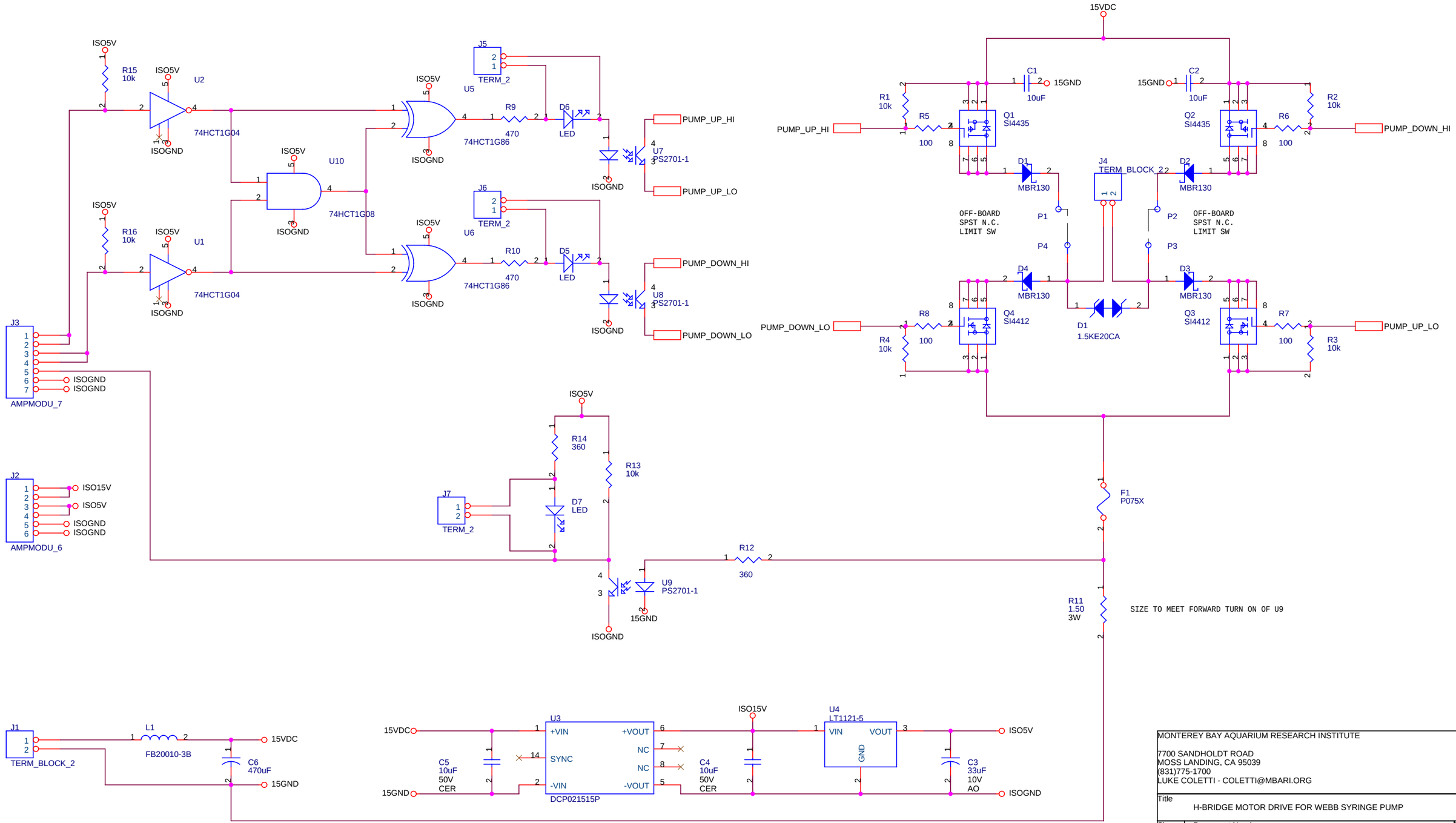

MONTEREY BAY AQUARIUM RESEARCH INSTITUTE

7700 SANDHOLDT ROAD
MOSS LANDING, CA 95039
(831)775-1700
LUKE COLETTI - COLETTI@MBARI.ORG

Title
H-BRIDGE MOTOR DRIVE FOR WEBB SYRINGE PUMP

Size	Document Number	Rev
B	1001757-SCH	A

Date: Tuesday, September 22, 2009 Sheet 1 of 1