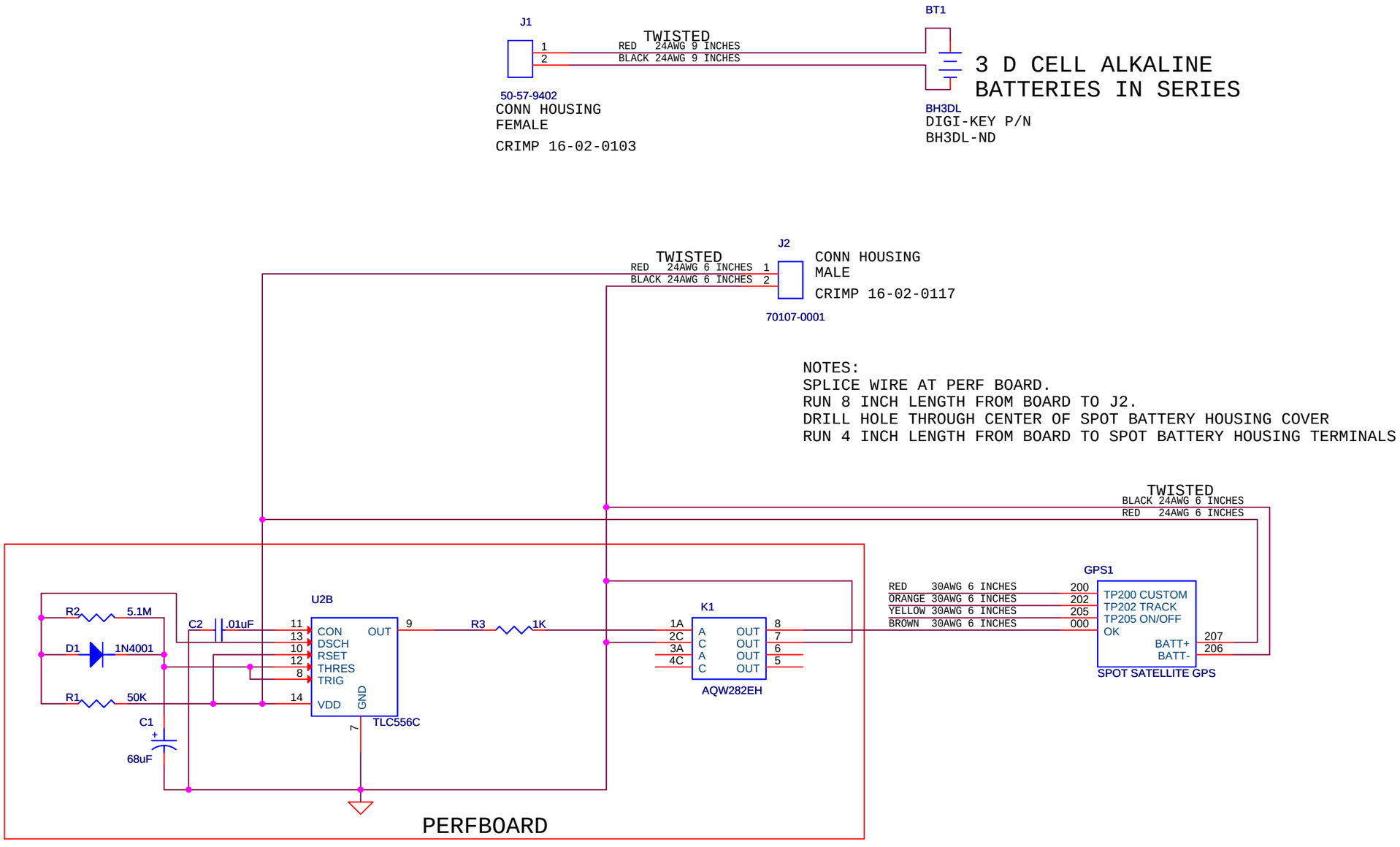

ASSEMBLY NOTES:
USE COMPONENT CARRIERS AND
SOCKETS

Title	SPOT Timer Circuit Prototype Circuit Board	
Size B	Document Number <Doc>	Rev A
Date: Wednesday, October 13, 2010	Sheet 1 of 1	