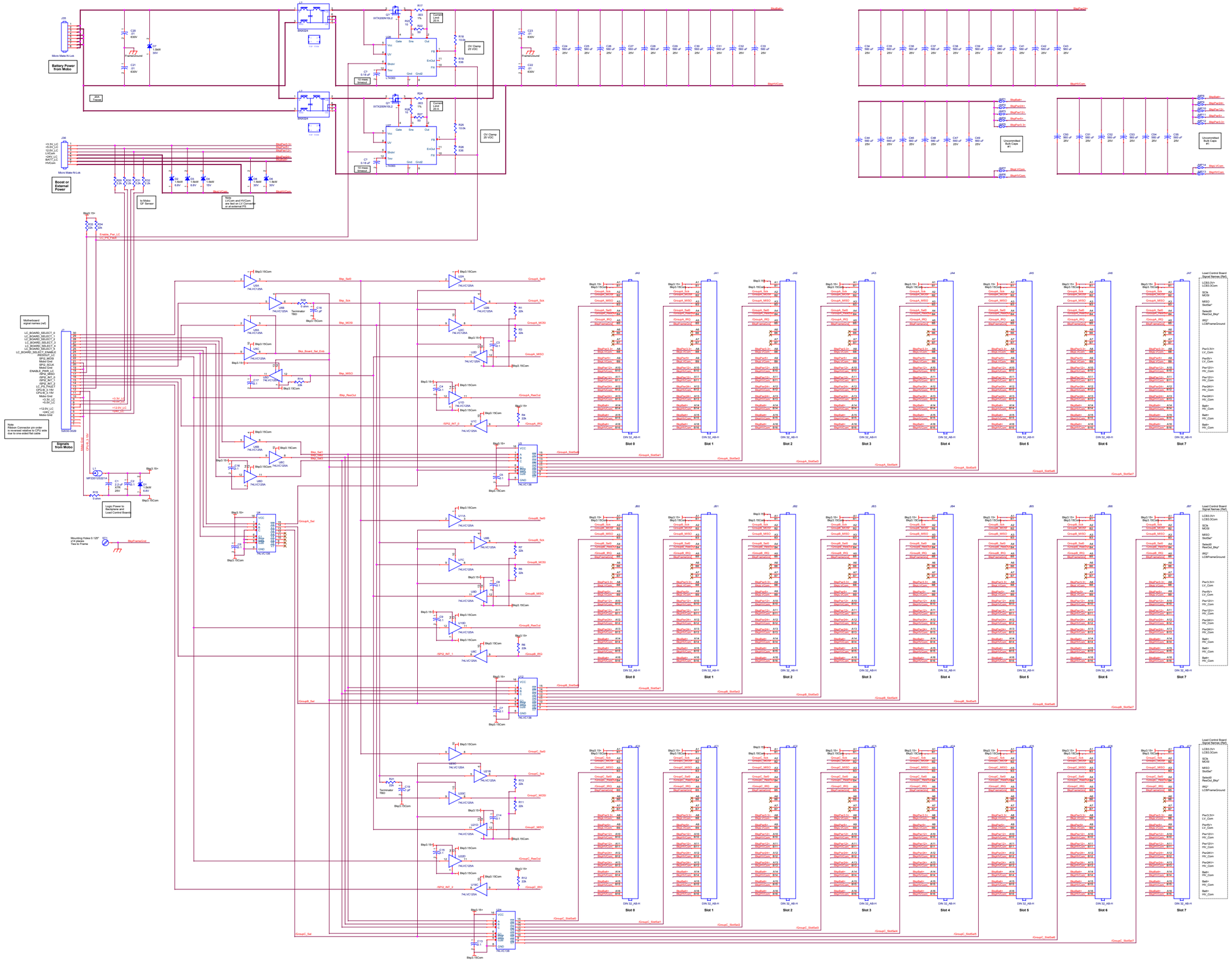

Rev	Date	By	Change
A		ECM	Release for Layout and Procurement

MBARI

Monterey Bay Aquarium Research Institute
7700 Sandholdt Road
Moss Landing, CA 95039
(831) 775-1700 www.mbari.org

(c) MBARI 2015

Title: Schematic, Long Load Control Backplane, Tethys LRAUV

Document Number: 110021164
Rev: <Rev>

Size: C
Custom
Date: Wednesday, June 10, 2015
Engineer: Bellinger
Sheet 1 of 1

Design file:
X:\MBETSB-LRAUV\PROJECT.DR\MBRGEN\PCB\LOADCONTROL\SUBSYSTEM\BACKPLANE\LONG\0010\SCHEMATIC\110021164 LOAD CONTROL LONG BACKPLANE.SCH

Output file:
LoadCtrl_Long\Schematic\Schematic

Author:
Notes:

Output Rev: