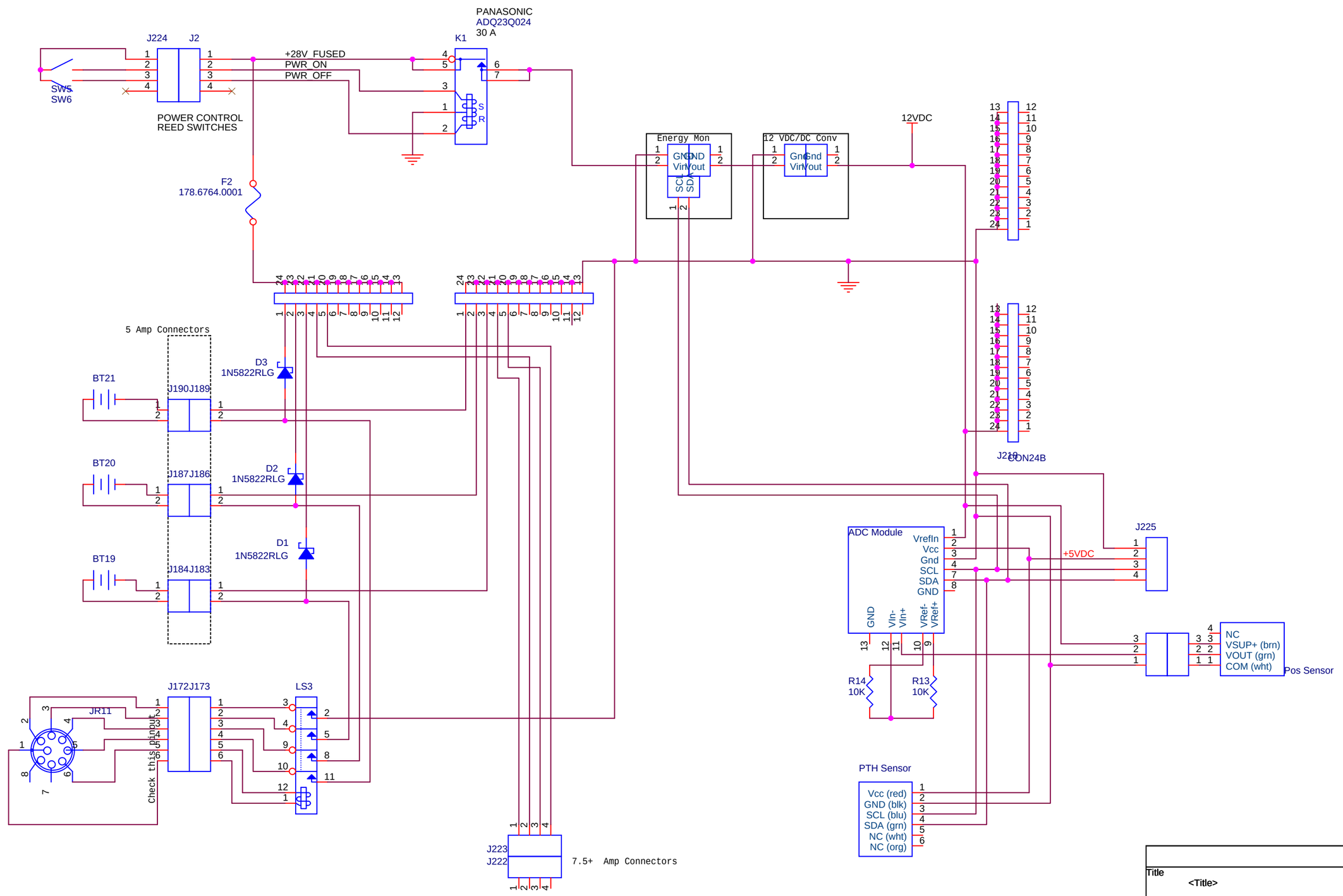

Title	<Title>	
Size B	Document Number <Doc>	Rev <RevCode>
Date: Tuesday, May 10, 2016	Sheet 1 of 1	