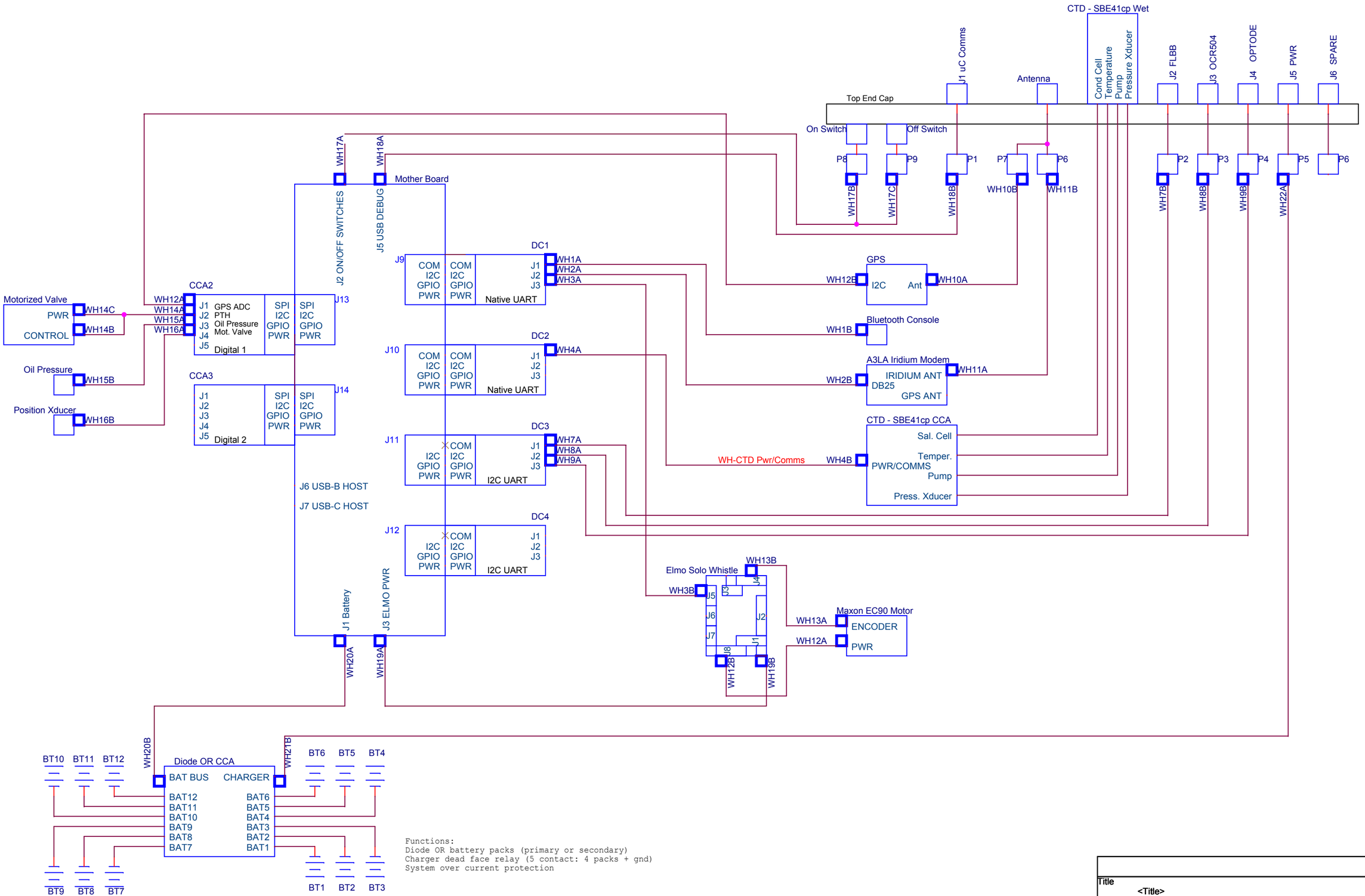

Functions:
Diode OR battery packs (primary or secondary)
Charger dead face relay (5 contact: 4 packs + gnd)
System over current protection

Title <Title>		
Size B	Document Number <Doc>	Rev <RevCode>
Date: Wednesday, January 27, 2016	Sheet 1 of 1	