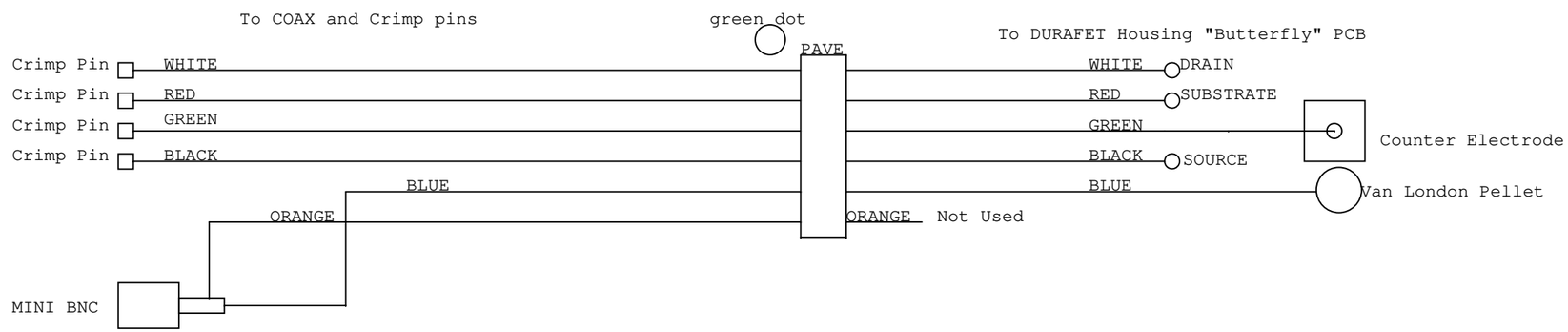

notes:

1. Mini BNC:Amphenol 031-70261
2. Coax:Belden 83264
3. PAVE Penetrator: SP6-E-150-6-TZ28-19.7-19.7
4. Crimp Pins: Samtec CC81L-2426-01-L
5. Splice blue PAVE wire to center conductor of coax
6. All wires plus COAX extend 12 " from bottom of Port Adapter
7. Side of PAVE with green dot faces down towards crimp pins
8. Orange wire attaches to coax shield for strain relief

Monterey Bay Aquarium Research Institute
7700 Sandholdt Road, Moss Landing, CA 95039

Schematic Name: SCHEMATIC1		
Page Title: PAGE1		Engineer: <Engineer>
Project Name: <Project Name>	Group Name: <Group>	Designer: <Designer>
System: <System>	Subsystem: <Subsystem>	Last Updated By: <Updated By>
Drawing Number: <MBARI DN>	Release: <Rev> Version: <Version>	Status: <Status> / Size: B
Page Modify Date: Thursday, December 16, 2021	Check In Date: <LCID>	Sheet <Page Number> of <Page Count>