SCALE: 1/16"=1'-0" | SCALE: 1/8"=1'-0" | SCALE: 1/4"=1'-0" | SCALE: 1/2"=1'-0" | SCALE: 3/4"=1'-0" | SCALE: 1"=1'-0" | SCALE: 1-1/2"=1'-0" | SCALE: 3"=1'-0"

IF THIS SHEET IS NOT 30" X 42", IT IS A REDUCED PRINT. SCALE ACCORDINGLY

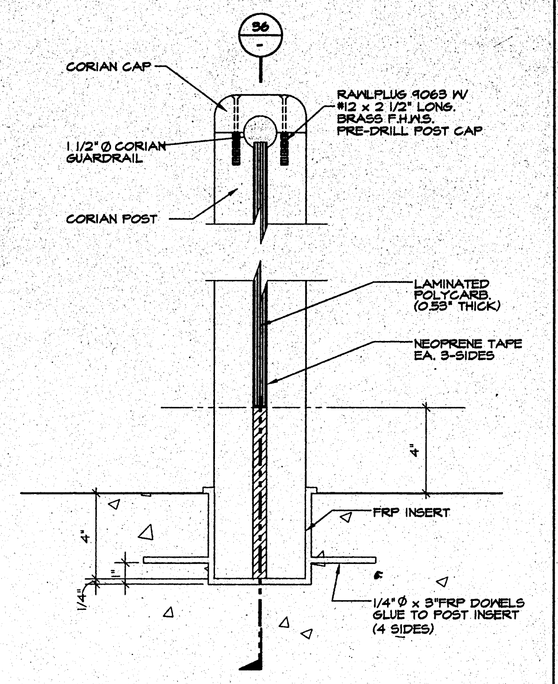

39	VERTICAL SECTION
3"=1'-0"	TEST TANK GUARDRAIL

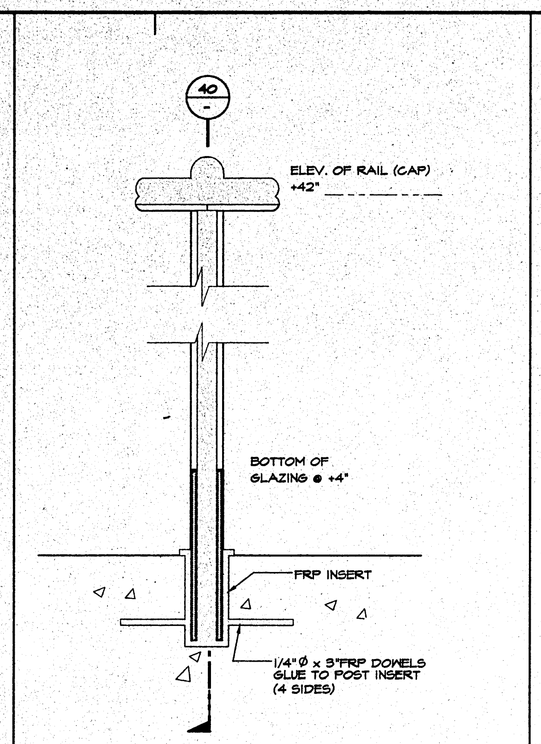

34	POST SECTION TEST TANK
3"=1'-0"	GUARDRAIL

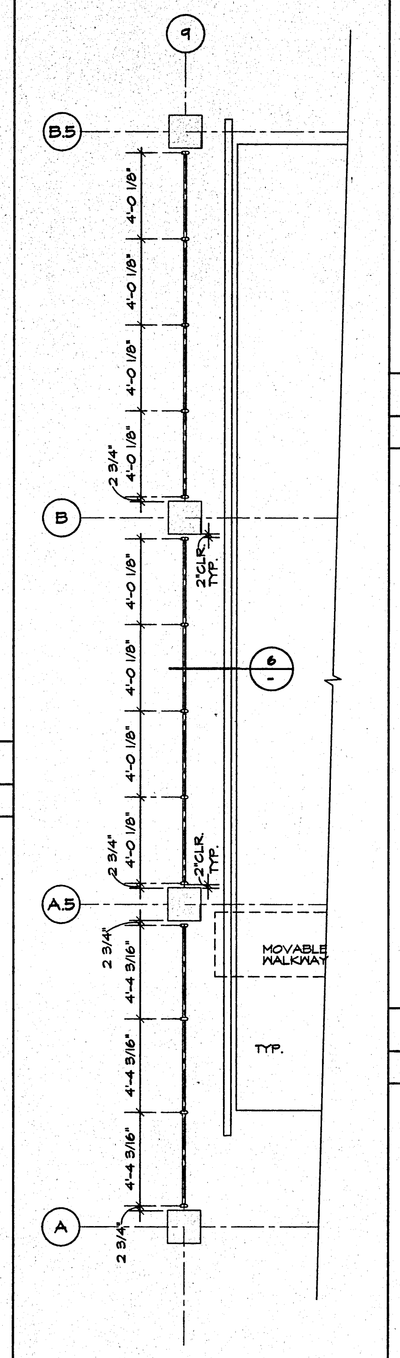

18	PARTIAL FLOOR PLAN
1/4"=1'-0"	

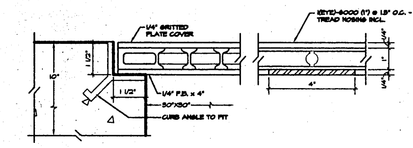

15	M.H. COVERS
3" = 1'-0"	

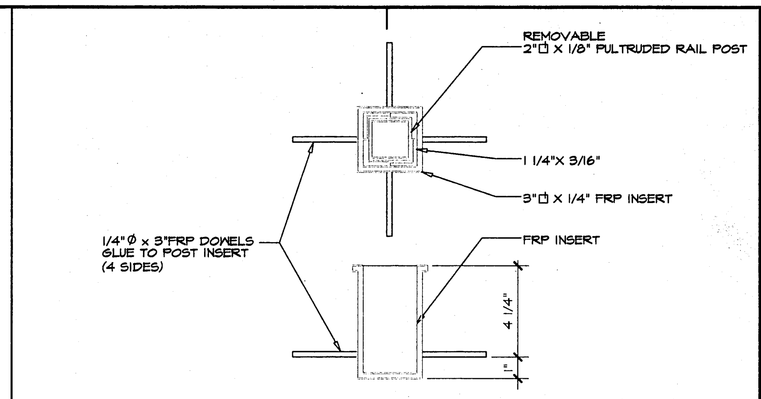

10	SAFETY RAIL POST INSERTS
1 1/2"=1'-0"	

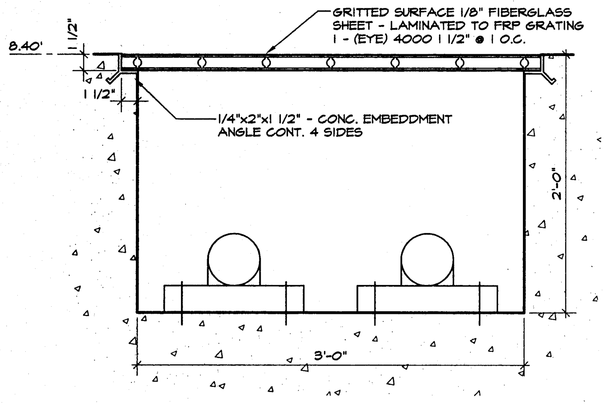

14	PIPE GUTTER IN FLOOR

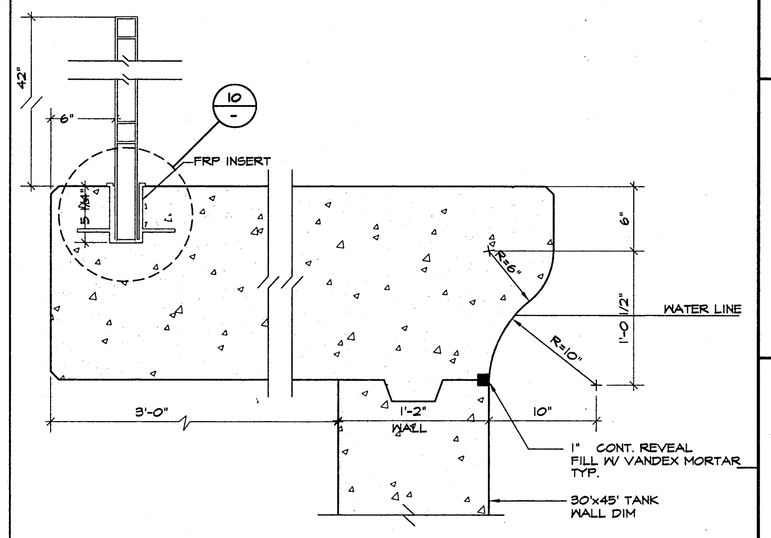

9	EDGE OF TANK DETAIL
1 1/2"=1'-0"	

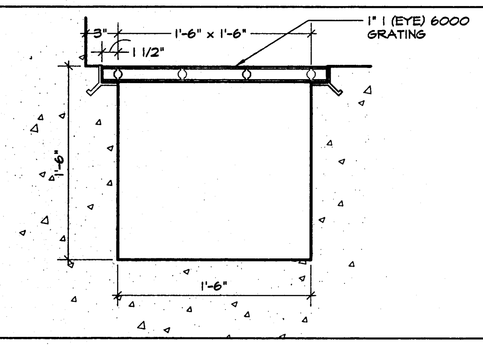

13	ELEVATOR PIT- SUMP
1 1/2"=1'-0"	

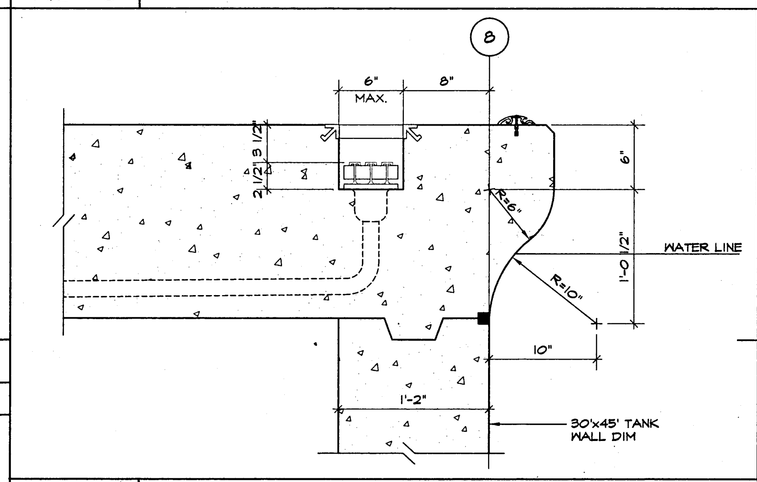

8	EDGE OF TANK DETAIL
1 1/2"=1'-0"	

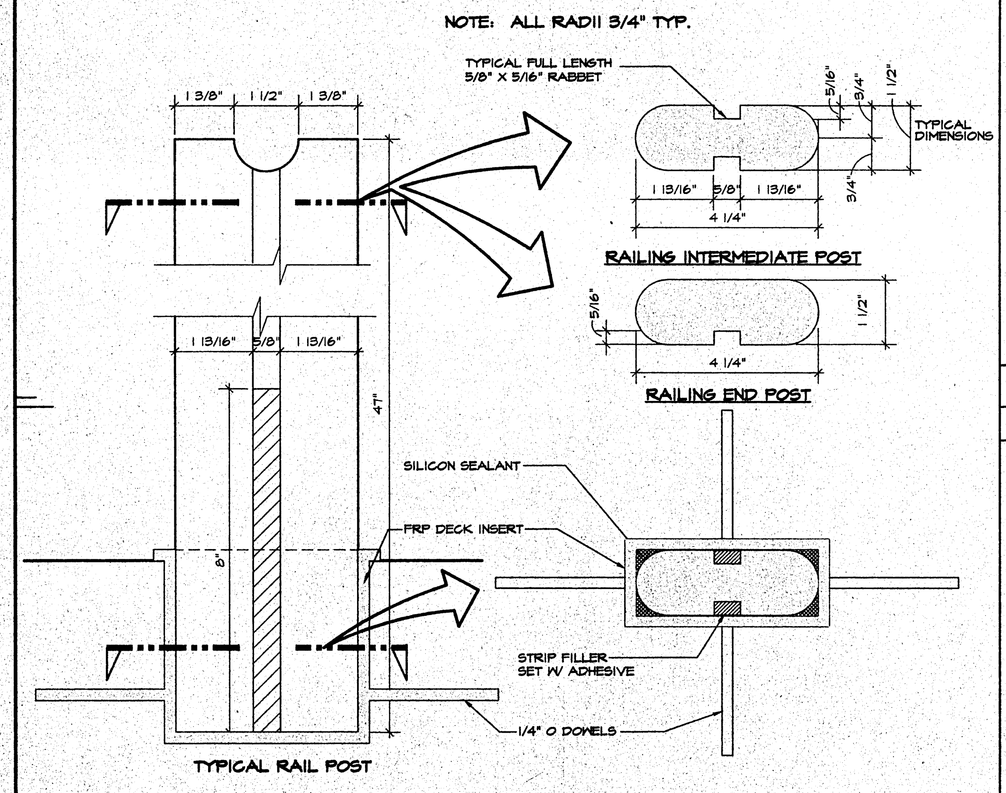

36	CORIAN GUARDRAIL COMPONENTS
HALF SCALE	

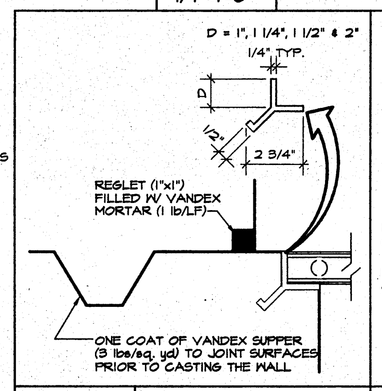

17	
3" = 1'-0"	

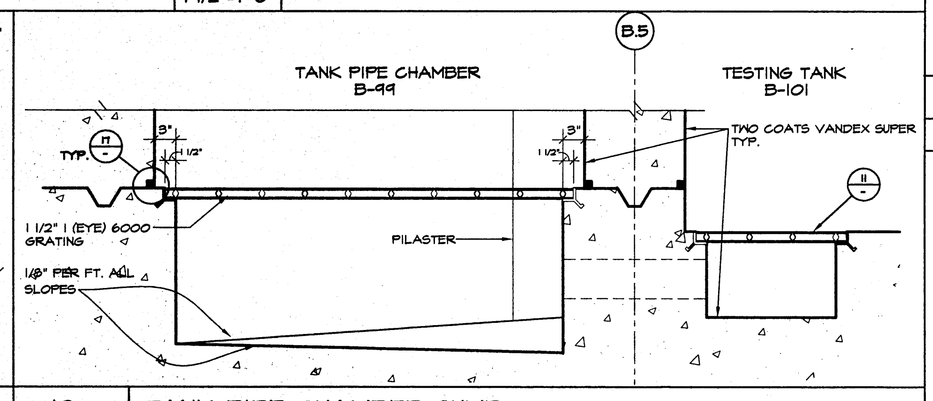

12	TANK PIPE CHAMBER SUMP
1" = 1'-0"	

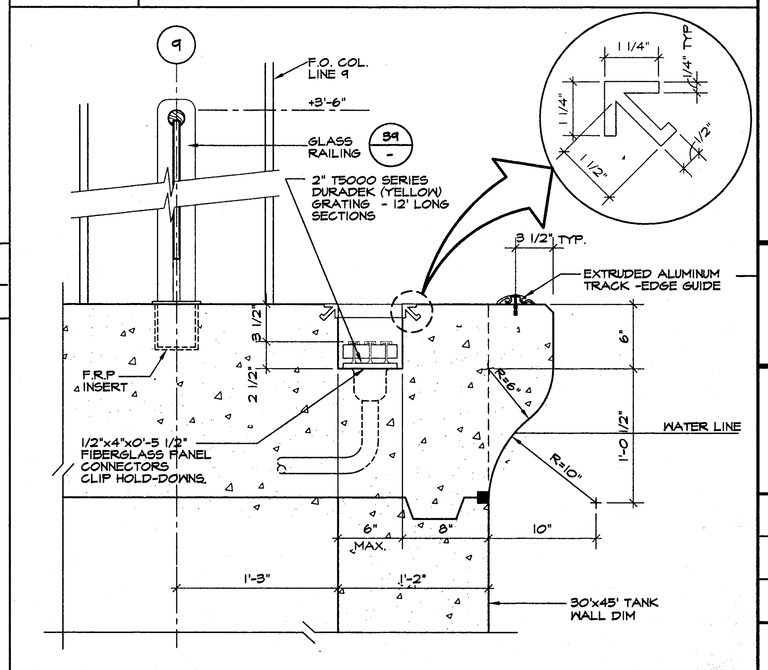

6	EDGE OF TANK DETAIL
1 1/2"=1'-0"	

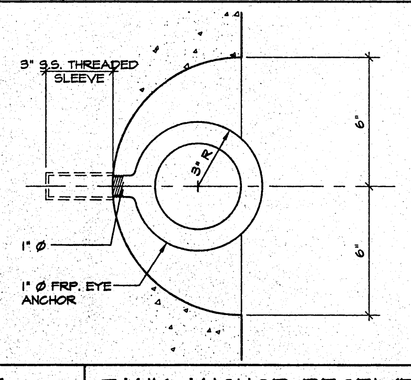

16	TANK ANCHOR RECEIVERS
3" = 1'-0"	

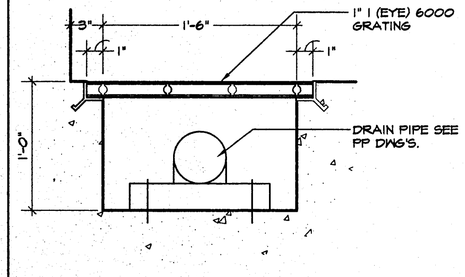

11	TANK DRAIN TRENCH
1 1/2"=1'-0"	

HBFL
Holewinski Blevens Fedelem & Lukes, Architects

380 Main Street
Salinas, California 93901
408/ 757-8001

Richard J. Fedelem C12691
Thomas R. Lukes C8982

Consultants:

Agency Approvals:

Revisions

No.	Description	Date
1	CLARIFICATIONS	1/10/00

M B A R I

MOSS LANDING FACILITIES
SANDHOLDT ROAD
MOSS LANDING CA. 95039

BUILDING B EXPANSION

INTERIOR / TANK DETAILS

1997 CODES

Drawn by:

Checked:

Approved:

Project No. 98009

Date: 01/10/00

Drawing No. A9.3

THE USE OF THESE PLANS AND SPECIFICATIONS SHALL BE RESTRICTED TO THE ORIGINAL SITE FOR WHICH THEY WERE PREPARED AND PUBLICATION THEREOF IS EXPRESSLY LIMITED TO SUCH USE, RE-USE, REPRODUCTION, OR PUBLICATION BY ANY METHOD, IN WHOLE OR IN PART, IS PROHIBITED. TITLE TO THE PLANS AND SPECIFICATIONS REMAINS IN THE ARCHITECT WITHOUT PREJUDICE VISUAL CONTACT WITH THESE PLANS AND SPECIFICATIONS SHALL CONSTITUTE PRIMA FACIE EVIDENCE OF THE ACCEPTANCE OF THESE RESTRICTIONS.