THE INFORMATION CONTAINED IN THIS DRAWING IS THE SOLE PROPERTY OF MBARI ANY REPRODUCTION IN PART OR WHOLE WITHOUT THE WRITTEN PERMISSION OF MBARI IS PROHIBITED.

| REVISIONS | | | |
|---|---|---|---|
| REV. | DESCRIPTION | DATE | APPROVED |
| | INITIAL RELEASE | | |

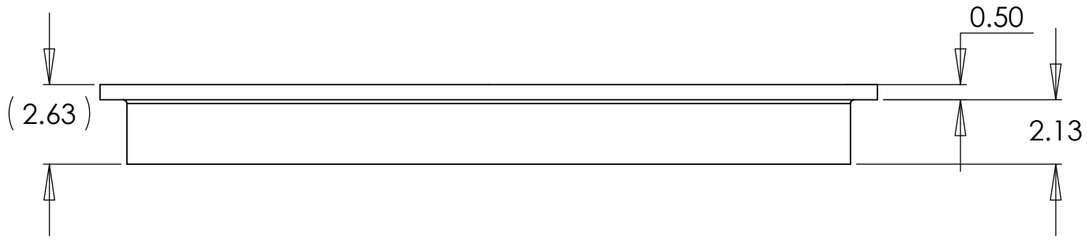


**MANUFACTURING PROCEDURE:**

1. PART WILL MANUFACTURED FROM ALUMINUM 6061 T-6
2. PART WIIL BE INSPECTED DIMENSIONALLY, REPORT REQUIRED
3. NEXT ASSEMBLY SEE DRAWING # 1003026

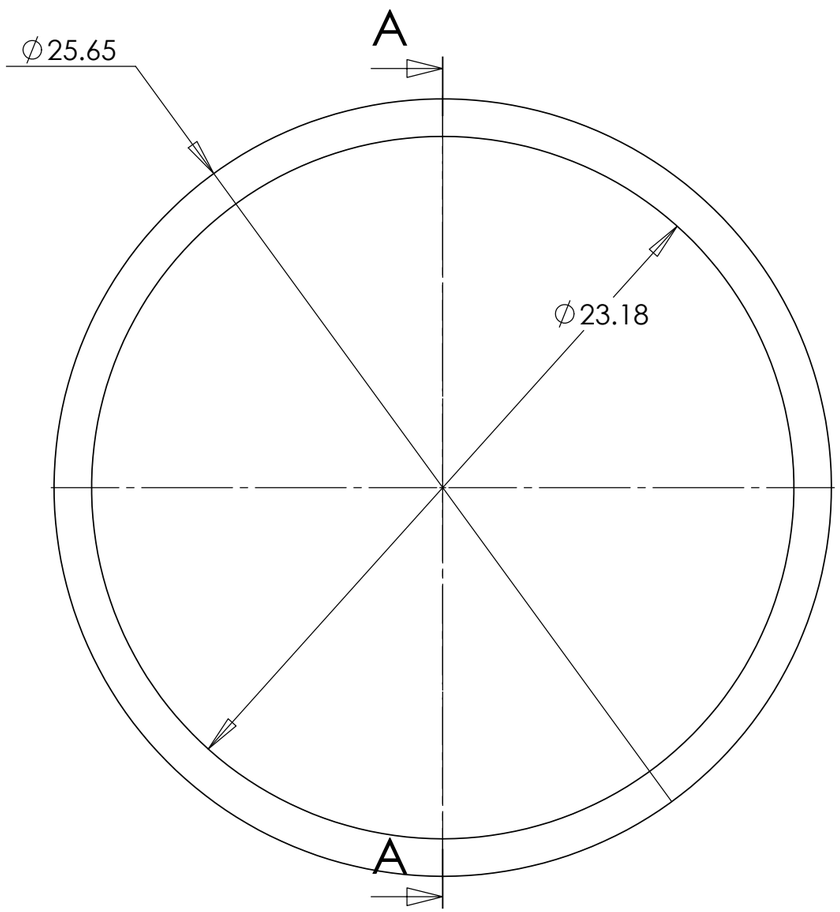


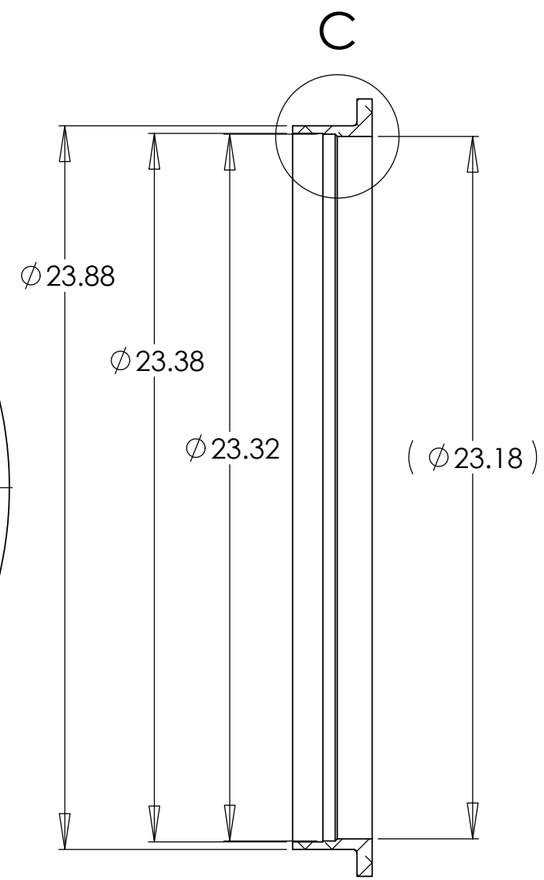


SECTION A-A
SCALE 1 : 5

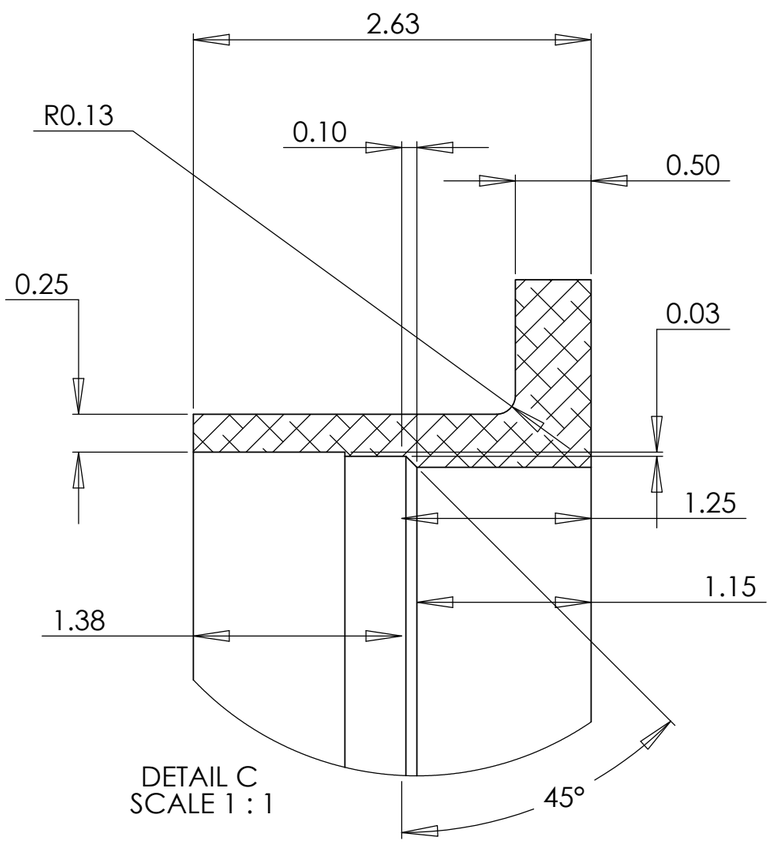


DETAIL C
SCALE 1 : 1

MATL. ALUMINUM 6061 T-6

**BILL OF MATERIALS**

| Shop / Q.C. | |
|---|---|
| Inspector | |
| Shop Foreman | |
| Engineer | |
| NEXT ASSY Description | NEXT ASSY Number |
| | |
| Application | |

UNLESS OTHERWISE SPECIFIED TOLERANCES ARE:

| 1 PLACE DIM ±1/16 | 2 PLACE DIM ±.02 | 3 PLACE DIM ±.005 | ANGLES ±1° |
|---|---|---|---|

1. DIMENSIONS ARE IN INCHES
2. DIMENSION LIMITS HELD AFTER PLATING.
3. REMOVE BURRS AND SHARP EDGES .015 MAX.
4. MACHINED FILLET RADII .0150-.030.
5. MACHINED DIAMETERS ON A COMMON CENTERLINE CONCENTRIC WITHIN .005
6. PERPENDICULARITY & PARALLELISM OF MACHINED SURFACES .002 PER INCH. MAX .012 INCHES FOR SINGLE SURFACE.

DO NOT SCALE DRAWING

| APPROVALS | DATE |
|---|---|
| DRAWN L. BIRD | 02/08/06 |
| ENGINEER | |
| CHECKED | |
| PROJECT NO. 900312 | |
| PROJECT ESP | |
| WEIGHT | |

**Monterey Bay Aquarium Research Institute**
**MBARI**
**7700 Sandholdt RD.**
**Moss Landing, CA 95039**
**PH: (831) 775-1700**

FLANGED RING

| SIZE | DWG. NO. | REV. |
|---|---|---|
| B | 1003023DWG | |

SCALE 1:10 | CAD FILE: MECH ENG ON TORNADO | SHEET 1 OF 1