THE INFORMATION CONTAINED IN THIS DRAWING IS THE SOLE PROPERTY OF MBARI ANY REPRODUCTION IN PART OR WHOLE WITHOUT THE WRITTEN PERMISSION OF MBARI IS PROHIBITED.

| REVISIONS | | | |
|---|---|---|---|
| REV. | DESCRIPTION | DATE | APPROVED |
| | INITIAL RELEASE | | |

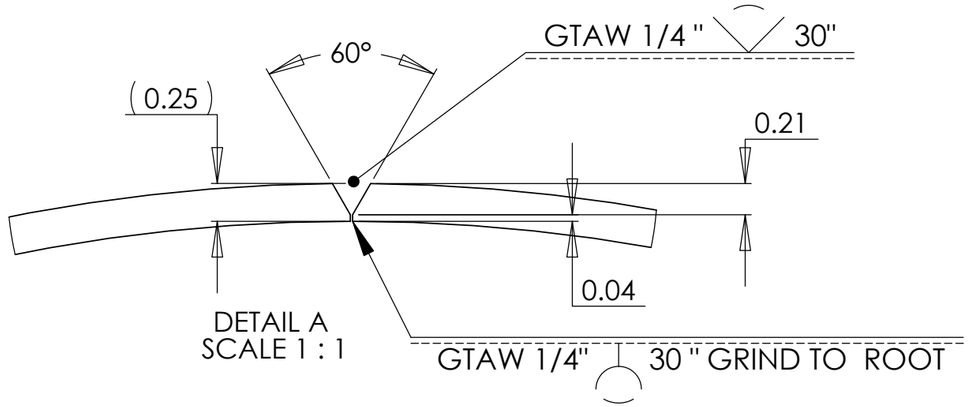


DETAIL A
SCALE 1 : 1

**MANUFACTURING PROCEDURE:**

1. MATERIAL ALUMINUM 6061 T-6 SHEET .250 THICK
2. PART WILL BE ROLLED AS SPECIFIED, FLATS CREATED IN ROLLING PROCESS WILL BE TRIMMED OR OTHERWISE ELIMINATED
3. MATERIAL MAY BE ANNEALED TO T-0 CONDITION IF REQUIRED
4. PART WILL BE WELDED AS SPECIFIED
5. FILLER MATERIAL WILL BE ROCKMOUNT NEPTUNE TIG
6. PARTS WILL BE THROUGHLY CLEANED WITH ACETONE PRIOR TO WELDING
7. WELDS WILL BE CLEAN, SMOOTH, AND FREE FROM POROSITY
8. TUNGSTEN INCLUSIONS WILL BE GROUND AND REWELDED
9. WELDMENT WILL BE INSPECTED DIMENSIONALLY AND FOR WELD QUALITY, REPORT REQUIRED
10. NEXT ASSEMBLY SEE DRAWING #1003026

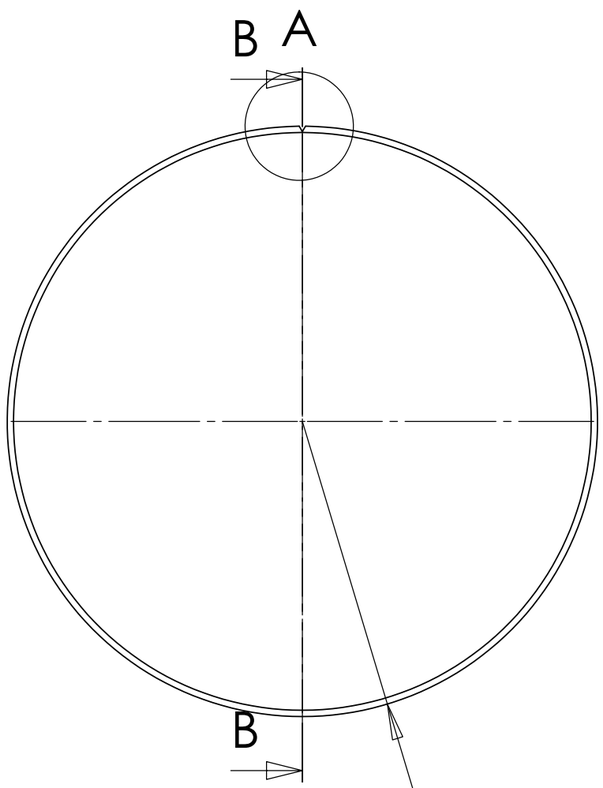


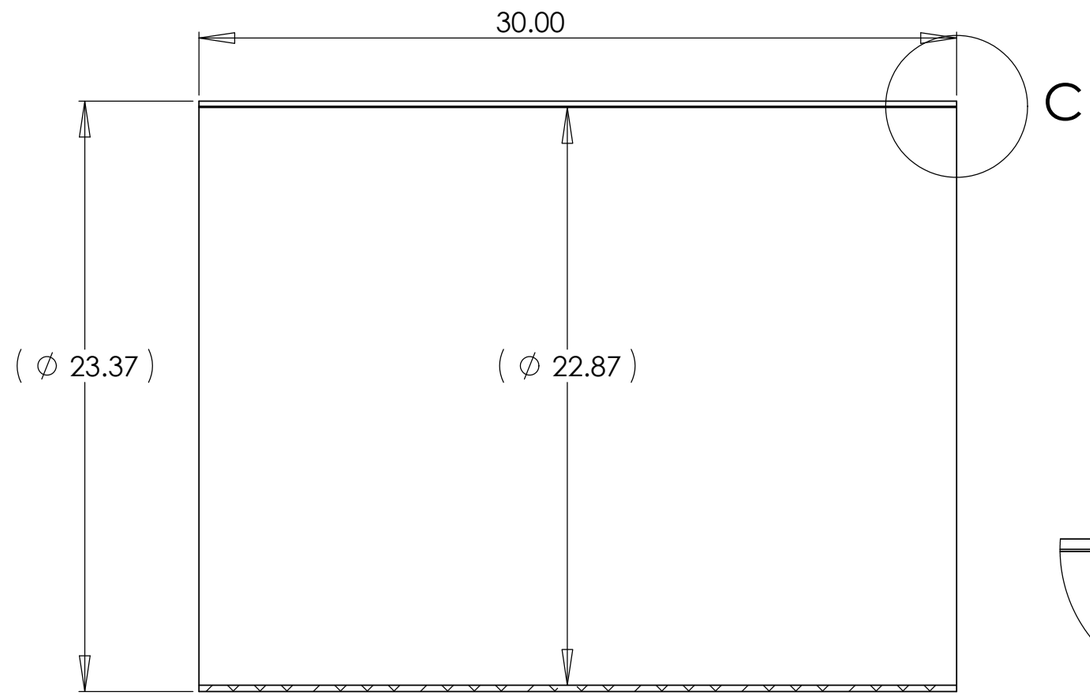


SECTION B-B
SCALE 1 : 6

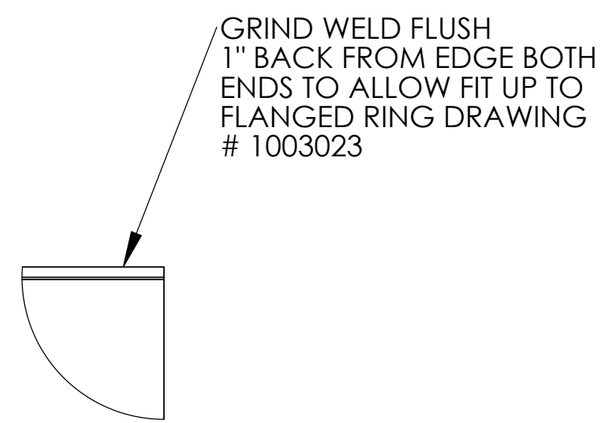


DETAIL C
SCALE 1 : 3

∅23.375 +0.0 -.062 ↧ 1.13 BOTH ENDS (MACHINE IF REQUIRED)

MATL. ALUMINUM 6061 T-6 SHEET .250 THICK

**BILL OF MATERIALS**

| Shop / Q.C. | |
|---|---|
| Inspector | |
| Shop Foreman | |
| Engineer | |
| NEXT ASSY Description | NEXT ASSY Number |
| | |
| Application | |

UNLESS OTHERWISE SPECIFIED TOLERANCES ARE:

| 1 PLACE DIM ±1/16 | 2 PLACE DIM ±.02 | 3 PLACE DIM ±.005 | ANGLES ±1° |
|---|---|---|---|

1. DIMENSIONS ARE IN INCHES
2. DIMENSION LIMITS HELD AFTER PLATING.
3. REMOVE BURRS AND SHARP EDGES .015 MAX.
4. MACHINED FILLET RADII .0150-.030.
5. MACHINED DIAMETERS ON A COMMON CENTERLINE CONCENTRIC WITHIN .005
6. PERPENDICULARITY & PARALLELISM OF MACHINED SURFACES .002 PER INCH. MAX .012 INCHES FOR SINGLE SURFACE.

DO NOT SCALE DRAWING

| APPROVALS | DATE |
|---|---|
| DRAWN L. BIRD | 02/08/06 |
| ENGINEER | |
| CHECKED | |
| PROJECT NO. 900312 | |
| PROJECT ESP | |
| WEIGHT | |

**Monterey Bay Aquarium Research Institute**
**MBARI**
**7700 Sandholdt RD.**
**Moss Landing, CA 95039**
**PH: (831) 775-1700**

MAIN TUBE WEDEMENT

| SIZE | DWG. NO. | REV. |
|---|---|---|
| B | 1003025DWG | |
| SCALE 1:10 | CAD FILE: MECH ENG ON TORNADO | SHEET 1 OF 1 |