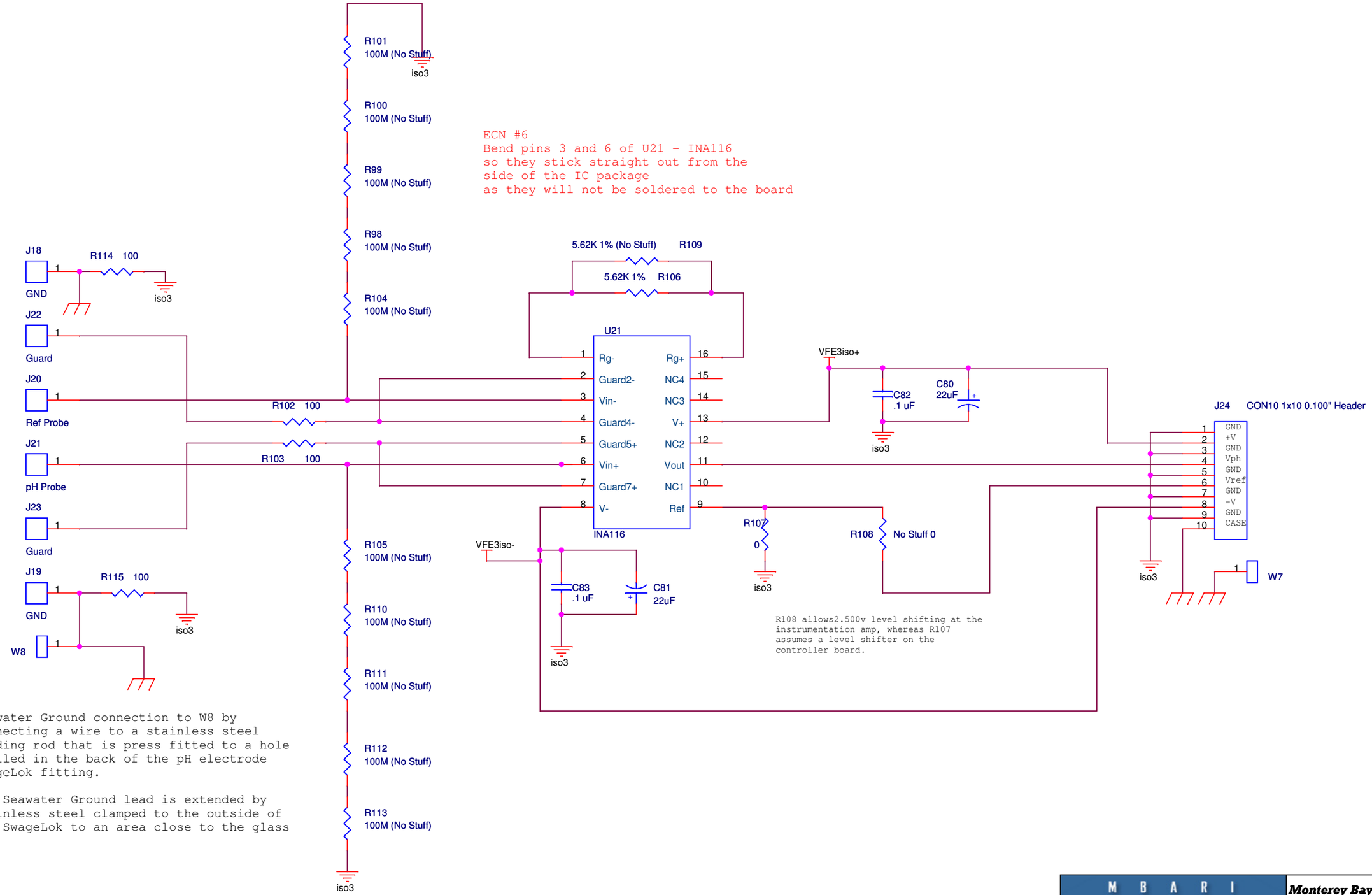

Seawater Ground connection to W8 by connecting a wire to a stainless steel welding rod that is press fitted to a hole drilled in the back of the pH electrode SwageLok fitting.

The Seawater Ground lead is extended by stainless steel clamped to the outside of the SwageLok to an area close to the glass tip.

M B A R I	Monterey Bay Aquarium Research Institute 7700 Sandhold Road, Moss Landing, CA 95039		
	Title pH Electrode Signal Conditioning - 'as built' Thom Maughan		
Engineer Thom Maughan	Size B	Document Number 10020229	Layout File <Layout File>	Rev 1.0a
Layout <Layout>	Date: Monday, January 26, 2009		Sheet 1 of 1	