THE INFORMATION CONTAINED IN THIS DRAWING IS THE SOLE PROPERTY OF MBARI ANY REPRODUCTION IN PART OR WHOLE WITHOUT THE WRITTEN PERMISSION OF MBARI IS PROHIBITED.

REVISIONS			
	INITIAL RELEASE	X/XX/01	J.E.

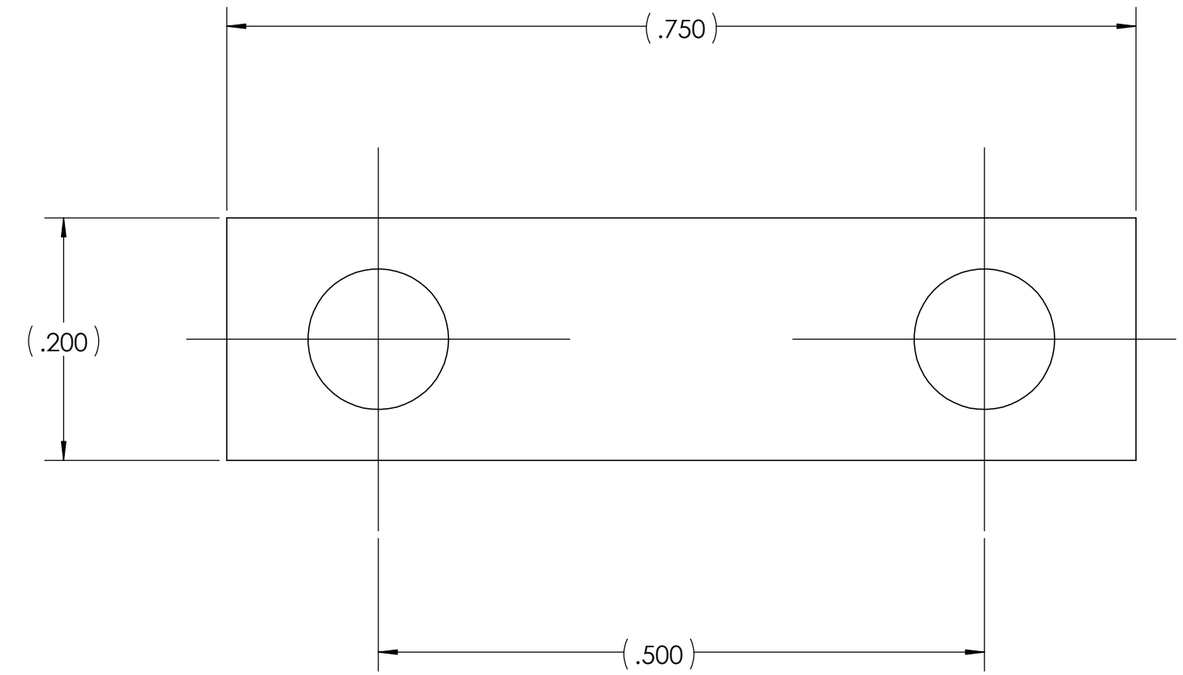

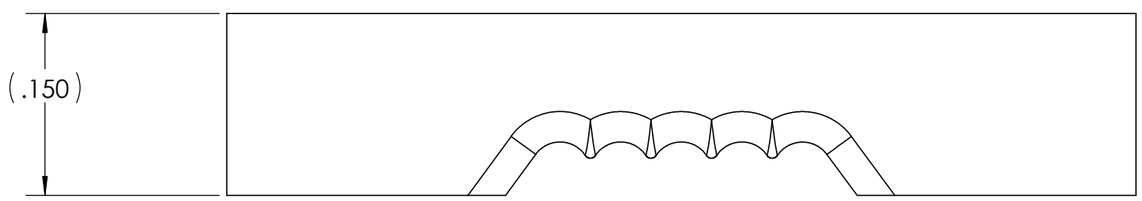

NOTES: (CONT. FROM TITLE BLOCK)

ITEM NO.	QTY.	PART NO.	DESCRIPTION	VENDOR	MATERIAL SPECIFICATION

BILL OF MATERIALS

Shop / Q.C.	
Inspector	
Shop Foreman	
Engineer	
NEXT ASSY Description	NEXT ASSY Number
Application	

UNLESS OTHERWISE SPECIFIED TOLERANCES ARE:

1 PLACE DIM	2 PLACE DIM	3 PLACE DIM	ANGLES
±1/16	±.02	±.005	±1°

1. DIMENSIONS ARE IN INCHES
2. DIMENSION LIMITS HELD AFTER PLATING.
3. REMOVE BURRS AND SHARP EDGES .015 MAX.
4. MACHINED FILLET RADII .0150-.030.
5. MACHINED DIAMETERS ON A COMMON CENTERLINE CONCENTRIC WITHIN .005
6. PERPENDICULARITY & PARALLELISM OF MACHINED SURFACES .002 PER INCH, MAX .012 INCHES FOR SINGLE SURFACE.

DO NOT SCALE DRAWING

APPROVALS	DATE
DRAWN P. COENEN	DD-MON-YY
ENGINEER P. COENEN	DD-MON-YY
CHECKED	
PROJECT NO. XXX	
PROJECT ZZZZZZZZ	
WEIGHT lb.	

Monterey Bay Aquarium Research Institute
MBARI
7700 Sandholdt RD.
Moss Landing, CA 95039
PH: (831) 775-1700

Elf Test Jig Cable Clamp

SIZE	DWG. NO.	REV.
B	.DWG	

SCALE 8:1 | CAD FILE: MECH ENG ON TORNADO | SHEET 1 OF 1