THE INFORMATION CONTAINED IN THIS DRAWING IS THE SOLE PROPERTY OF MBARI ANY REPRODUCTION IN PART OR WHOLE WITHOUT THE WRITTEN PERMISSION OF MBARI IS PROHIBITED.

REVISIONS

REV.	DESCRIPTION	DATE	APPROVED
A	INITIAL RELEASE	MMM DD, YYYY	Gene M

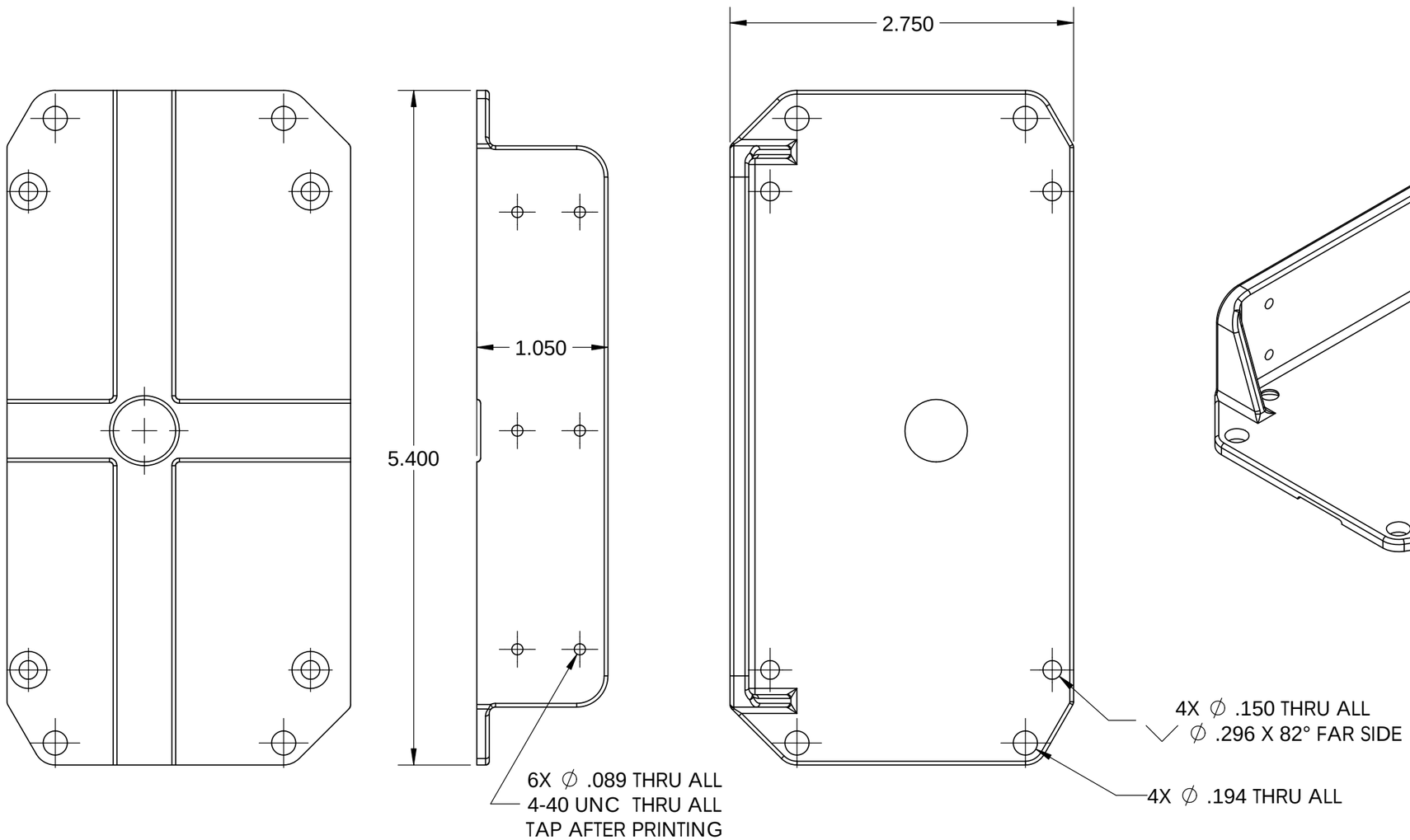

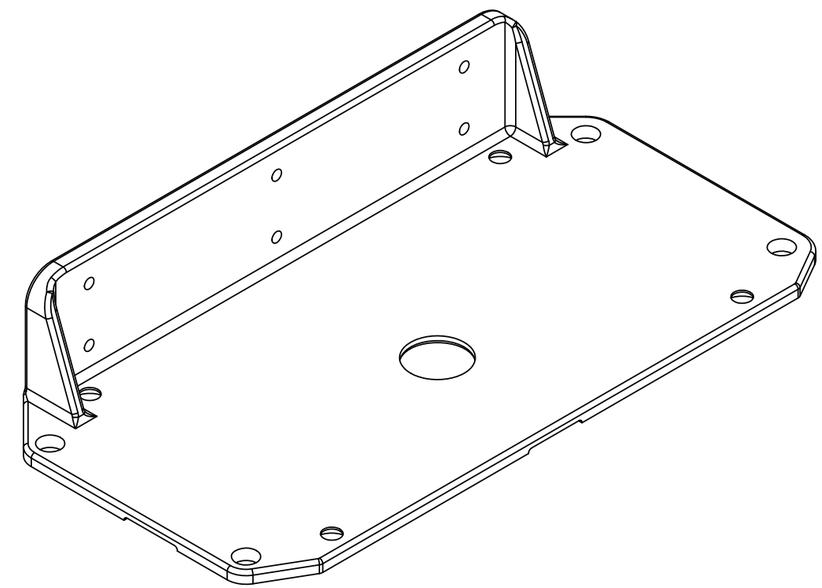

3D Printed Part
Mat'l: ABS white (or ABS-PC, or black)
Qty: 1

Print at best resolution

BILL OF MATERIALS

NEXT ASSY Description	NEXT ASSY Number

THIRD ANGLE PROJECTION

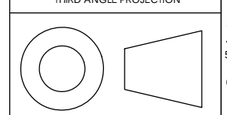

UNLESS OTHERWISE SPECIFIED TOLERANCES ARE:

1 PLACE DIM ±1/16	2 PLACE DIM ±.02	3 PLACE DIM ±.005	ANGLES ±1°

1. DIMENSIONS ARE IN INCHES
2. DIMENSION LIMITS HELD AFTER PLATING.
3. REMOVE BURRS AND SHARP EDGES .015 MAX.
4. MACHINED FILLET RADII .0150-.030.
5. MACHINED DIAMETERS ON A COMMON CENTERLINE CONCENTRIC WITHIN .OO5
6. PERPENDICULARITY & PARALLELISM OF MACHINED SURFACES .002 PER INCH. MAX .012 INCHES FOR SINGLE SURFACE.

DO NOT SCALE DRAWING

APPROVALS	DATE
DRAWN Gene M.	
ENGINEER Gene M.	
CHECKED	
PROJECT NO. 901602	
PROJECT Coastal Profiling Float	
MAT'L Material <not specified>	

Monterey Bay Aquarium Research Institute

7700 Sandholdt Rd.
Moss Landing, CA 95039
831 775-1922

MODEM-GPS MTG PLATE

SIZE	DWG. NO.	REV.
B		A

SCALE 1:2 | CAD FILE: | SHEET 1 OF 1

Status: