THE INFORMATION CONTAINED IN THIS DRAWING IS THE SOLE PROPERTY OF MBARI ANY REPRODUCTION IN PART OR WHOLE WITHOUT THE WRITTEN PERMISSION OF MBARI IS PROHIBITED.

REVISIONS

| REV. | DESCRIPTION | DATE | APPROVED |
|---|---|---|---|
| A | INITIAL RELEASE | MMM DD, YYYY | Gene M |

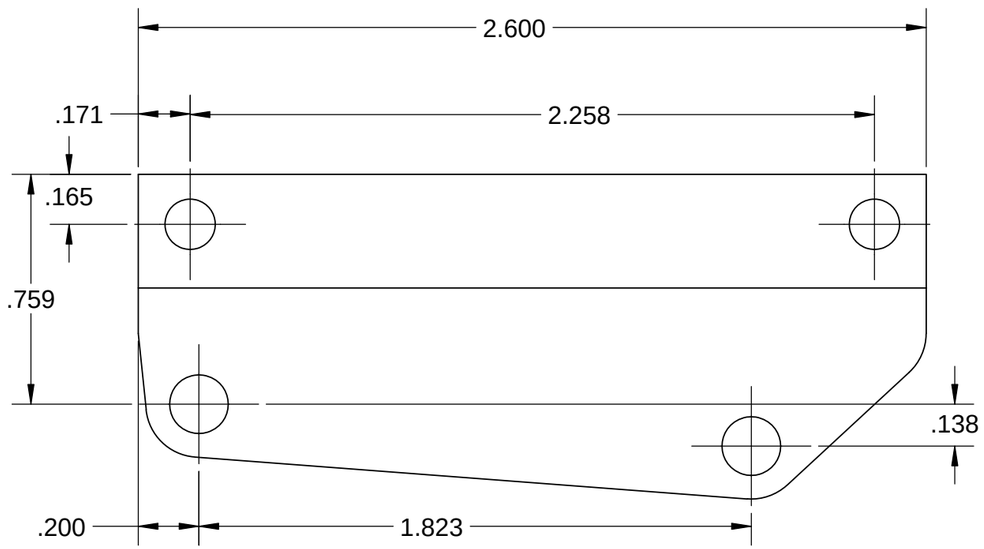


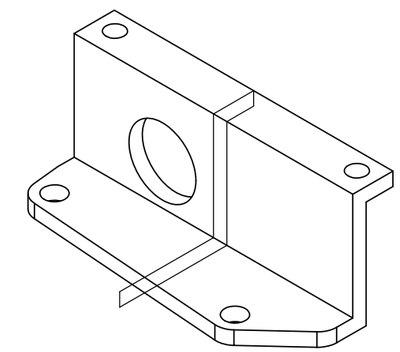

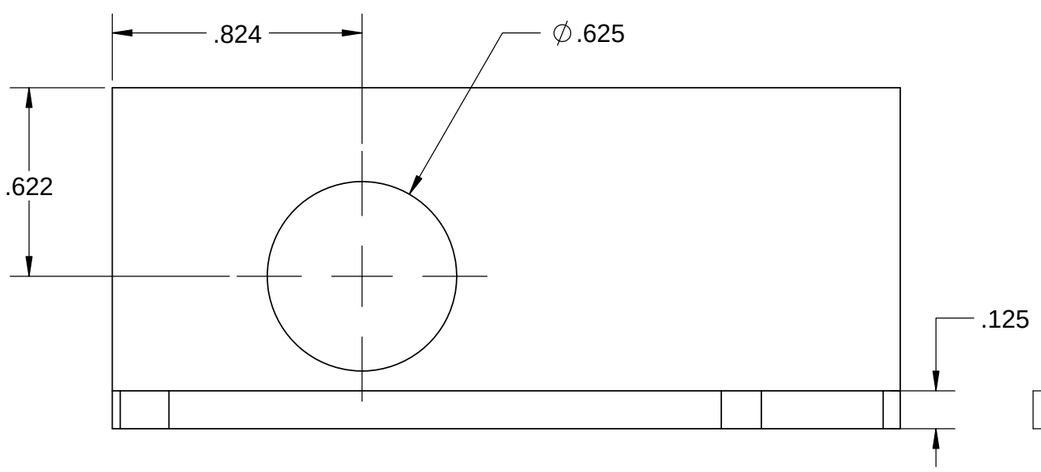


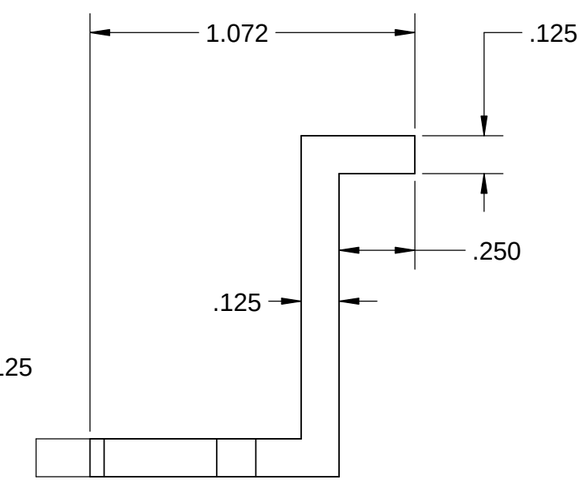


**BILL OF MATERIALS**

| NEXT ASSY Description | NEXT ASSY Number |
|---|---|
| | |

THIRD ANGLE PROJECTION

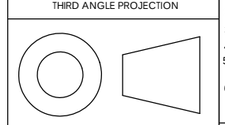

UNLESS OTHERWISE SPECIFIED TOLERANCES ARE:

| 1 PLACE DIM ±1/16 | 2 PLACE DIM ±.02 | 3 PLACE DIM ±.005 | ANGLES ±1° |
|---|---|---|---|

1. DIMENSIONS ARE IN INCHES
2. DIMENSION LIMITS HELD AFTER PLATING.
3. REMOVE BURRS AND SHARP EDGES .015 MAX.
4. MACHINED FILLET RADII .0150-.030.
5. MACHINED DIAMETERS ON A COMMON CENTERLINE CONCENTRIC WITHIN .OO5
6. PERPENDICULARITY & PARALLELISM OF MACHINED SURFACES .002 PER INCH. MAX .012 INCHES FOR SINGLE SURFACE.

DO NOT SCALE DRAWING

| APPROVALS | DATE |
|---|---|
| DRAWN | Gene M. |
| ENGINEER | Gene M. |
| CHECKED | |
| PROJECT NO. | 901206 |
| PROJECT | Coastal Profiling Float |
| MAT'L | 6061-T6 |

**Monterey Bay Aquarium Research Institute**
M B A R I
**7700 Sandholdt Rd.**
**Moss Landing, CA 95039**
**831 775-1922**

| SIZE | DWG. NO. | REV. |
|---|---|---|
| B | 1-20082015-901206 | A |

SCALE 2:1 | CAD FILE: | SHEET 1 OF 1

Status: Released to Manufacturing