THE INFORMATION CONTAINED IN THIS DRAWING IS THE SOLE PROPERTY OF MBARI ANY REPRODUCTION IN PART OR WHOLE WITHOUT THE WRITTEN PERMISSION OF MBARI IS PROHIBITED.

REVISIONS

REV.	DESCRIPTION	DATE	APPROVED
A	INITIAL RELEASE	MMM DD, YYYY	Gene M

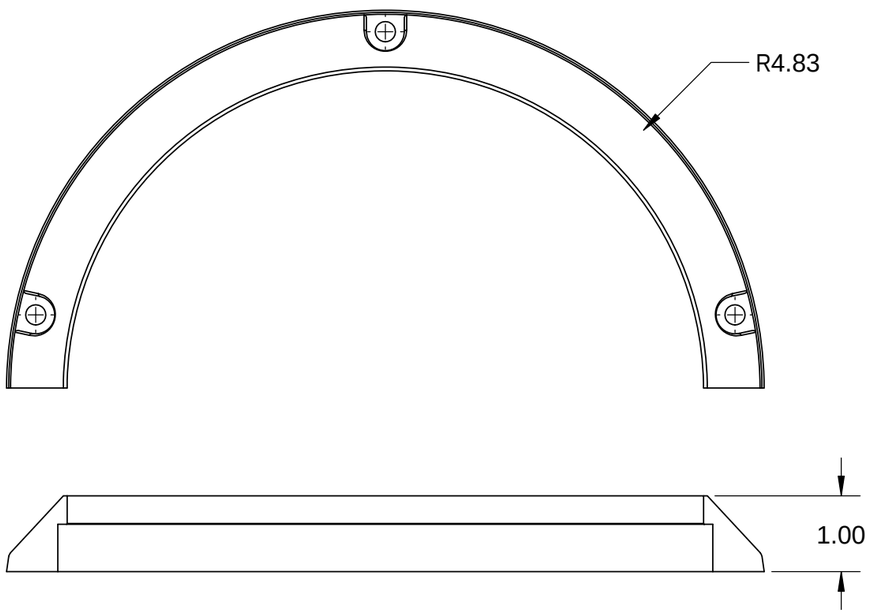

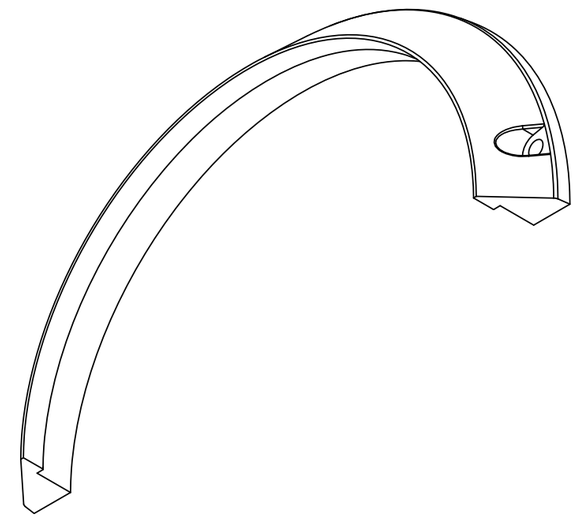

3D Printed Part
Mat'l: ABS, white

Print at best resolution

BILL OF MATERIALS

NEXT ASSY Description	NEXT ASSY Number

THIRD ANGLE PROJECTION

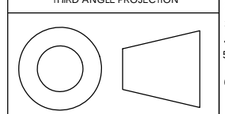

UNLESS OTHERWISE SPECIFIED TOLERANCES ARE:

1 PLACE DIM ±1/16	2 PLACE DIM ±.02	3 PLACE DIM ±.005	ANGLES ±1°

1. DIMENSIONS ARE IN INCHES
2. DIMENSION LIMITS HELD AFTER PLATING.
3. REMOVE BURRS AND SHARP EDGES .015 MAX.
4. MACHINED FILLET RADII .0150-.030.
5. MACHINED DIAMETERS ON A COMMON CENTERLINE CONCENTRIC WITHIN .OO5
6. PERPENDICULARITY & PARALLELISM OF MACHINED SURFACES .002 PER INCH. MAX .012 INCHES FOR SINGLE SURFACE.

DO NOT SCALE DRAWING

APPROVALS	DATE
DRAWN	Gene M.
ENGINEER	Gene M.
CHECKED	
PROJECT NO.	901206
PROJECT	Coastal Profiling Float
MAT'L	Delrin 2700 NC010, Low Viscosity Acetal Copolymer (SS)

Monterey Bay Aquarium Research Institute
M B A R I
7700 Sandholdt Rd.
Moss Landing, CA 95039
831 775-1922

Pedestal Base Clamp

SIZE	DWG. NO.	REV.
B		A

SCALE 1:2 | CAD FILE: | SHEET 1 OF 1

Status: