ZONE	REV.	REVISIONS DESCRIPTION	DATE	APPROVED

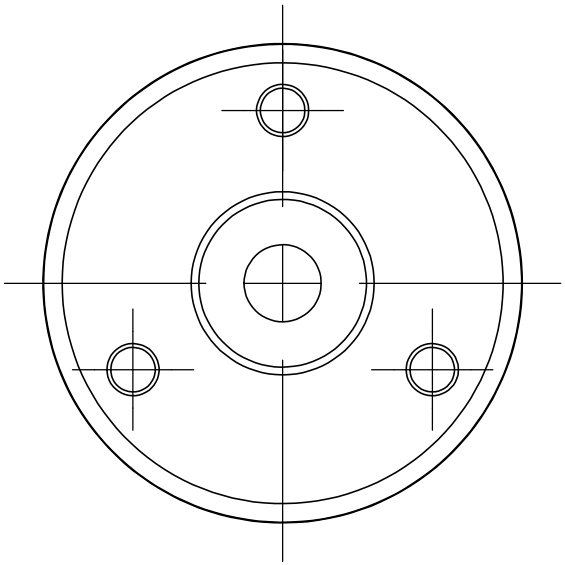

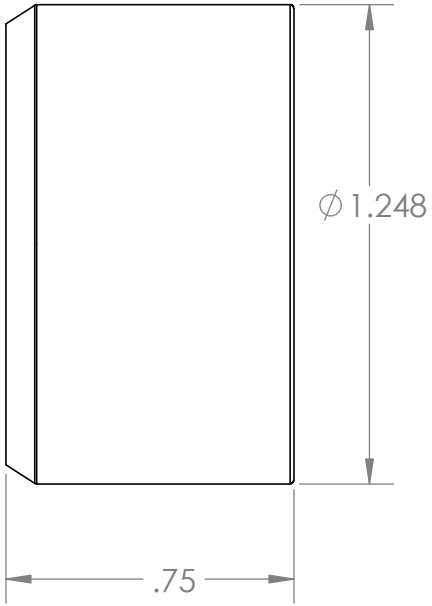

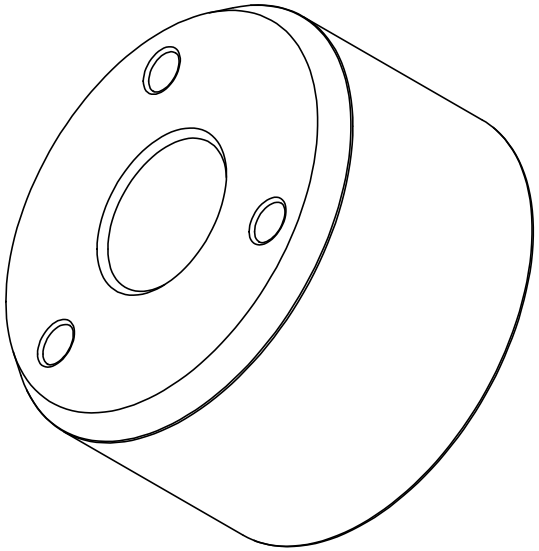

Status:

NEXT ASSY	USED ON
APPLICATION	

DIMENSIONS ARE IN INCHES
TOLERANCES:
TWO PLACE DECIMAL ±0.02
THREE PLACE DECIMAL ±0.005
ANGLES: ±1°
DRILLED HOLES: +.005
-.002

MATERIAL DURABLE

FINISH --

DO NOT SCALE DRAWING

APPROVALS	DATE
DRAWN	Jordan Caress 9/16/24
CHECKED	
ENGINEER	

PROJECT NO. 368000

PROJECT

WEIGHT

Monterey Bay Aquarium Research Institute

MBARI
7700 Sandholdt RD.
Moss Landing, CA 95039
PH: (831) 775-1700

PROP_WASHER_REVC

SIZE	DWG. NO.	REV.
A		C

SCALE:2:1 WEIGHT: SHEET 1 OF 1