THE INFORMATION CONTAINED IN THIS DRAWING IS THE SOLE PROPERTY OF MBARI ANY REPRODUCTION IN PART OR WHOLE WITHOUT THE WRITTEN PERMISSION OF MBARI IS PROHIBITED.

REVISIONS				
ZONE	REV.	DESCRIPTION	DATE	APPROVED

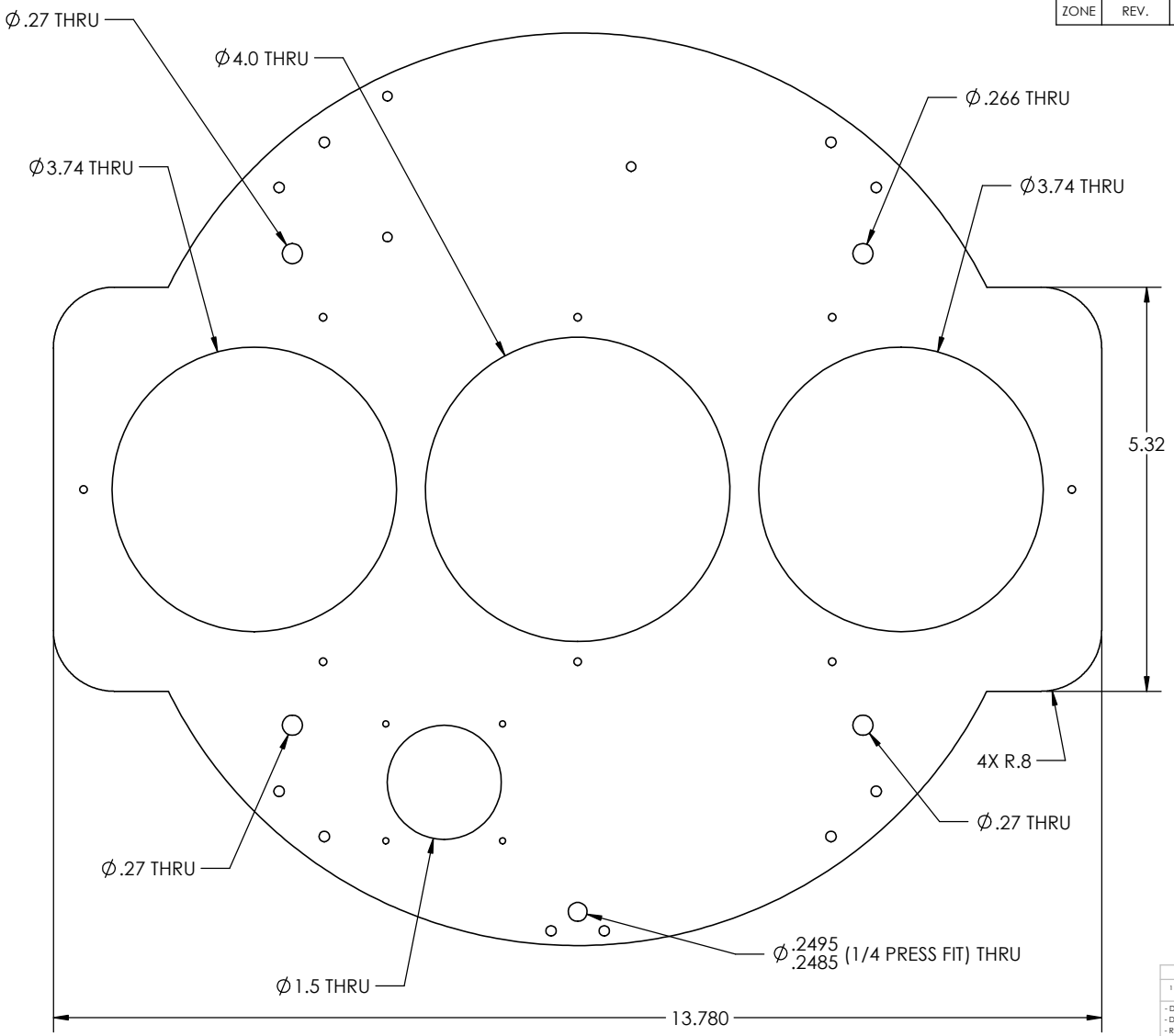

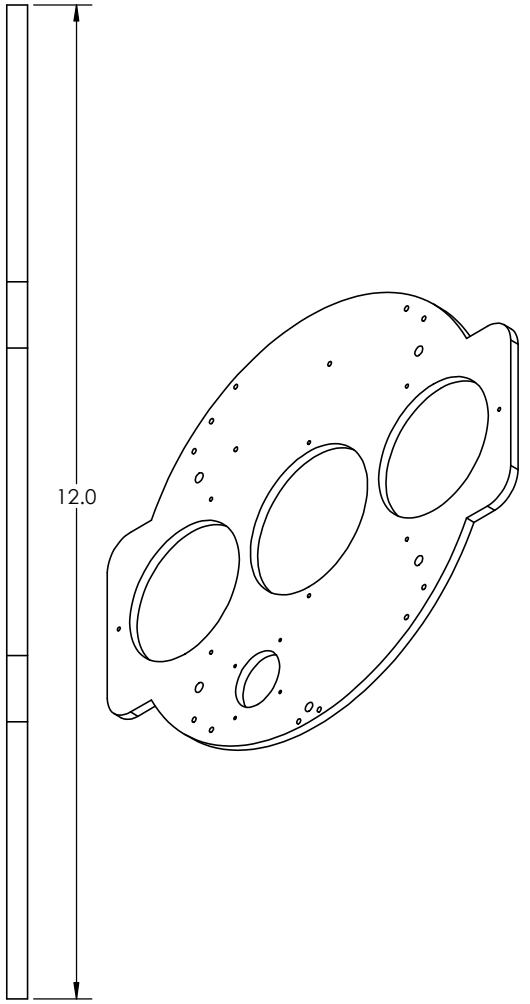

UNLESS OTHERWISE SPECIFIED

1 PLACE DIM ±1/16	2 PLACE DIM ±.02	3 PLACE DIM ±.005	ANGLES ±1°

- DIMENSIONS ARE IN INCHES.
- DIMENSION LIMITS HELD AFTER PLATING.
- REMOVE BURRS AND SHARP EDGES .015 MAX.
- MACHINED FILLET RADII .015-.030.
- ⌖ .005 FOR MACHINED DIAMETERS SHARING A ℄
- ⊥ & // OF MACHINED SURFACES .002 PER INCH. MAX .012 INCHES FOR SINGLE SURFACE.
- √ ON MACHINED SURFACES
- √ ON DRILLED HOLES

DO NOT SCALE DRAWING

APPROVALS	DATE
DRAWN: JORDAN CARESS	2025-03-25
CHECKED:	
PROJECT:	
MATERIAL: MATERIAL <NOT SPECIFIED>	
VOLUME: 21.828IN^3	
WEIGHT: 0.789LB	

MONTEREY BAY AQUARIUM RESEARCH INSTITUTE
MBARI
7700 SANDHOLDT RD.
MOSS LANDING, CA 95039
PH: (831) 775-1700

100222900_HYPERION_MVC_MOUNTING_PLATE

SIZE	DWG. NO.	REV.
B	100222900	

SCALE 1:4 SHEET 1 OF 3

THE INFORMATION CONTAINED IN THIS DRAWING IS THE SOLE PROPERTY OF MBARI ANY REPRODUCTION IN PART OR WHOLE WITHOUT THE WRITTEN PERMISSION OF MBARI IS PROHIBITED.

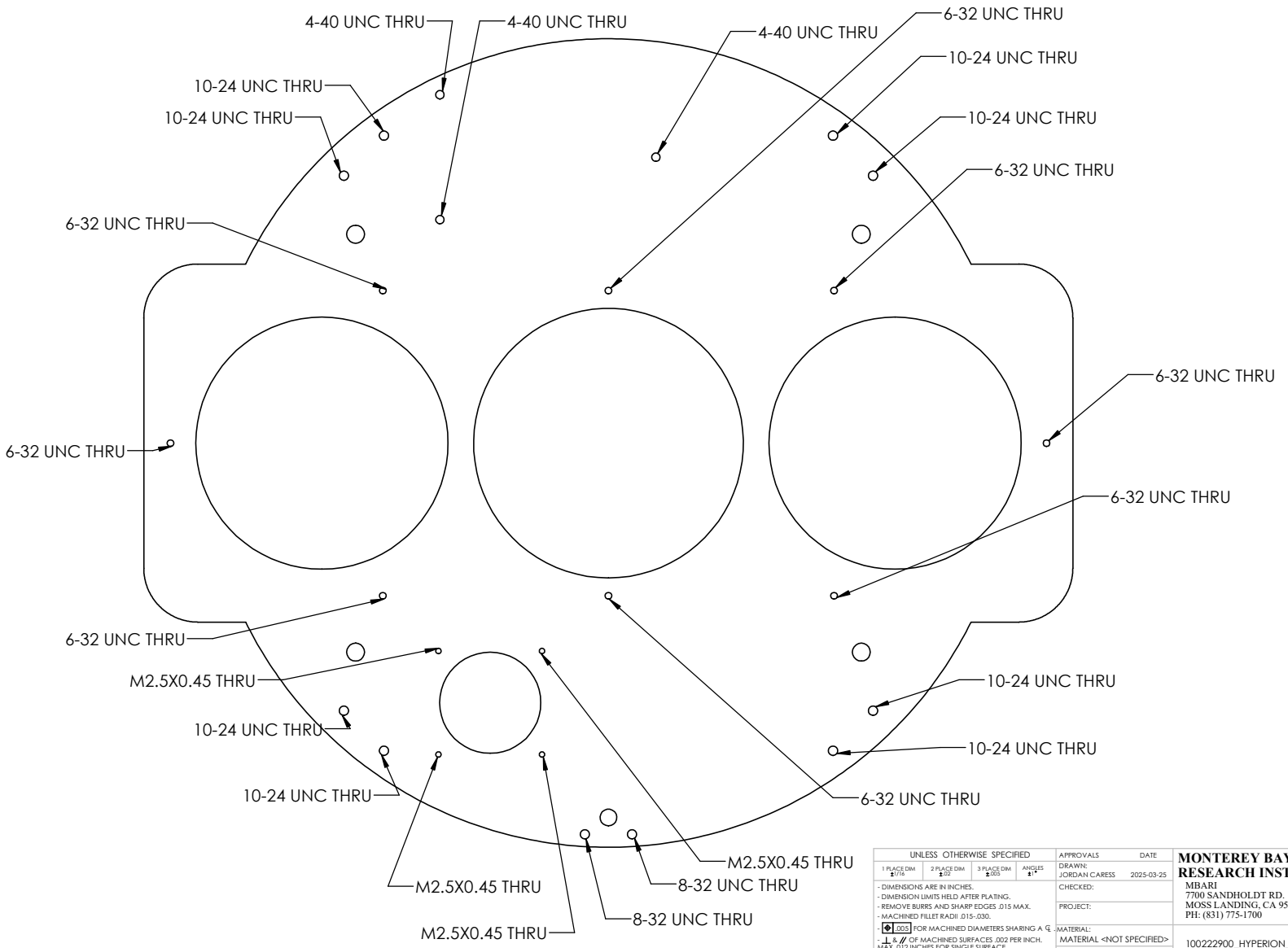

UNLESS OTHERWISE SPECIFIED	APPROVALS	DATE	**MONTEREY BAY AQUARIUM RESEARCH INSTITUTE**
1 PLACE DIM ±1/16 · 2 PLACE DIM ±.02 · 3 PLACE DIM ±.005 · ANGLES ±1°	DRAWN: JORDAN CARESS	2025-03-25	MBARI 7700 SANDHOLDT RD. MOSS LANDING, CA 95039 PH: (831) 775-1700
- DIMENSIONS ARE IN INCHES. - DIMENSION LIMITS HELD AFTER PLATING. - REMOVE BURRS AND SHARP EDGES .015 MAX. - MACHINED FILLET RADII .015-.030.	CHECKED:		
- ⌖ .005 FOR MACHINED DIAMETERS SHARING A ℄ - ⊥ & // OF MACHINED SURFACES .002 PER INCH. MAX .012 INCHES FOR SINGLE SURFACE.	PROJECT:		
- √ ON MACHINED SURFACES - √ ON DRILLED HOLES	MATERIAL: MATERIAL <NOT SPECIFIED> VOLUME: 21.828IN^3 WEIGHT: 0.789LB		100222900_HYPERION_MVC_MOUNTING_PLATE
DO NOT SCALE DRAWING	SIZE B · DWG. NO. 100222900 · REV.		
	SCALE 1:4		SHEET 2 OF 3

THE INFORMATION CONTAINED IN THIS DRAWING IS THE SOLE PROPERTY OF MBARI ANY REPRODUCTION IN PART OR WHOLE WITHOUT THE WRITTEN PERMISSION OF MBARI IS PROHIBITED.

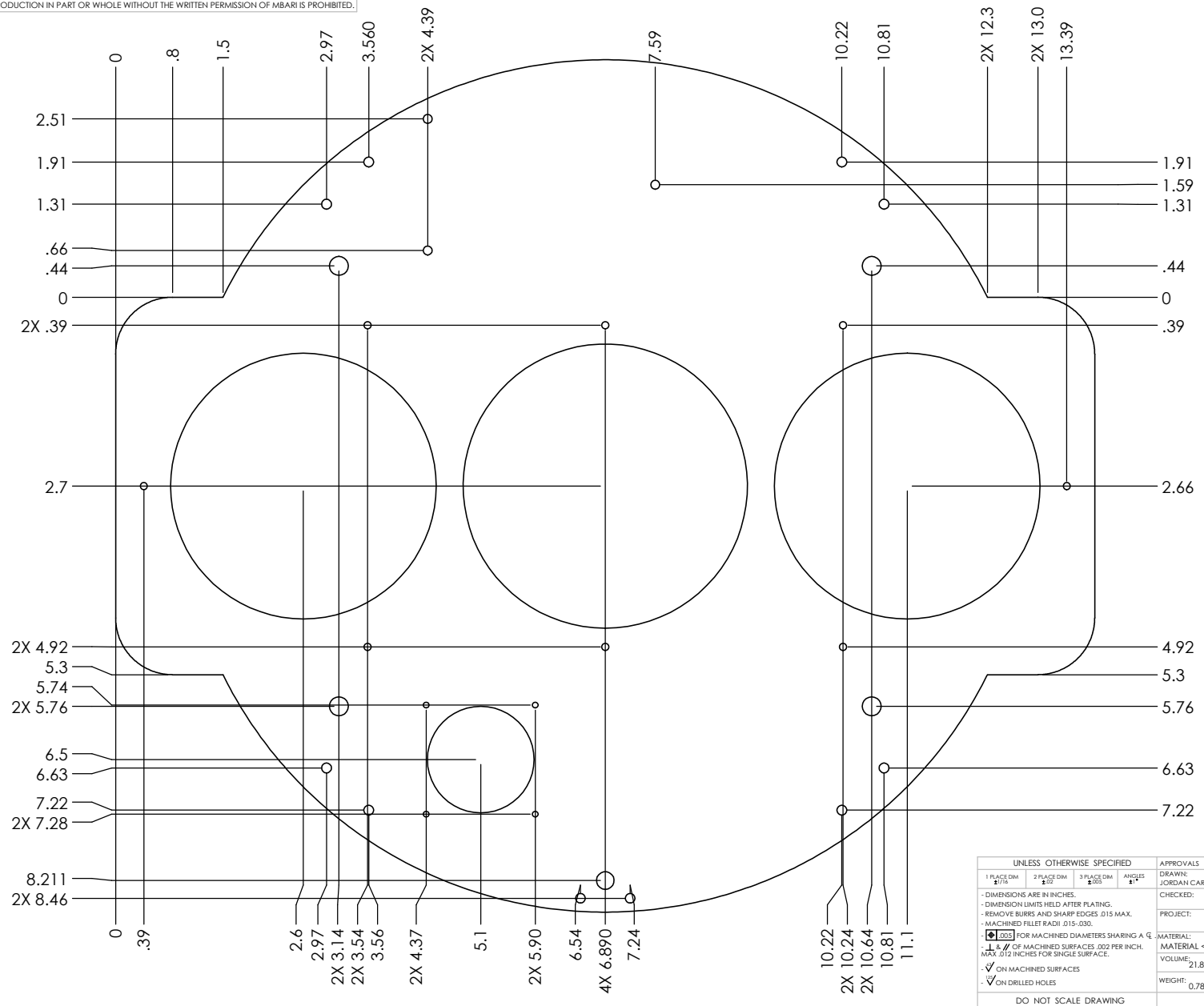

UNLESS OTHERWISE SPECIFIED				APPROVALS	DATE
1 PLACE DIM ±1/16	2 PLACE DIM ±.02	3 PLACE DIM ±.005	ANGLES ±1°	DRAWN: JORDAN CARESS	2025-03-25
- DIMENSIONS ARE IN INCHES. - DIMENSION LIMITS HELD AFTER PLATING. - REMOVE BURRS AND SHARP EDGES .015 MAX. - MACHINED FILLET RADII .015-.030. - ⌖ .005 FOR MACHINED DIAMETERS SHARING A ℄ - ⊥ & // OF MACHINED SURFACES .002 PER INCH. MAX .012 INCHES FOR SINGLE SURFACE. - √ ON MACHINED SURFACES - √ ON DRILLED HOLES				CHECKED:	
				PROJECT:	
				MATERIAL: MATERIAL <NOT SPECIFIED>	
				VOLUME: 21.828IN^3	
				WEIGHT: 0.789LB	
DO NOT SCALE DRAWING					

MONTEREY BAY AQUARIUM RESEARCH INSTITUTE
MBARI
7700 SANDHOLDT RD.
MOSS LANDING, CA 95039
PH: (831) 775-1700

100222900_HYPERION_MVC_MOUNTING_PLATE

SIZE B | DWG. NO. 100222900 | REV.

SCALE 1:4 | SHEET 3 OF 3