THE INFORMATION CONTAINED IN THIS DRAWING IS THE SOLE PROPERTY OF MBARI ANY REPRODUCTION IN PART OR WHOLE WITHOUT THE WRITTEN PERMISSION OF MBARI IS PROHIBITED.

REVISIONS				
ZONE	REV.	DESCRIPTION	DATE	APPROVED

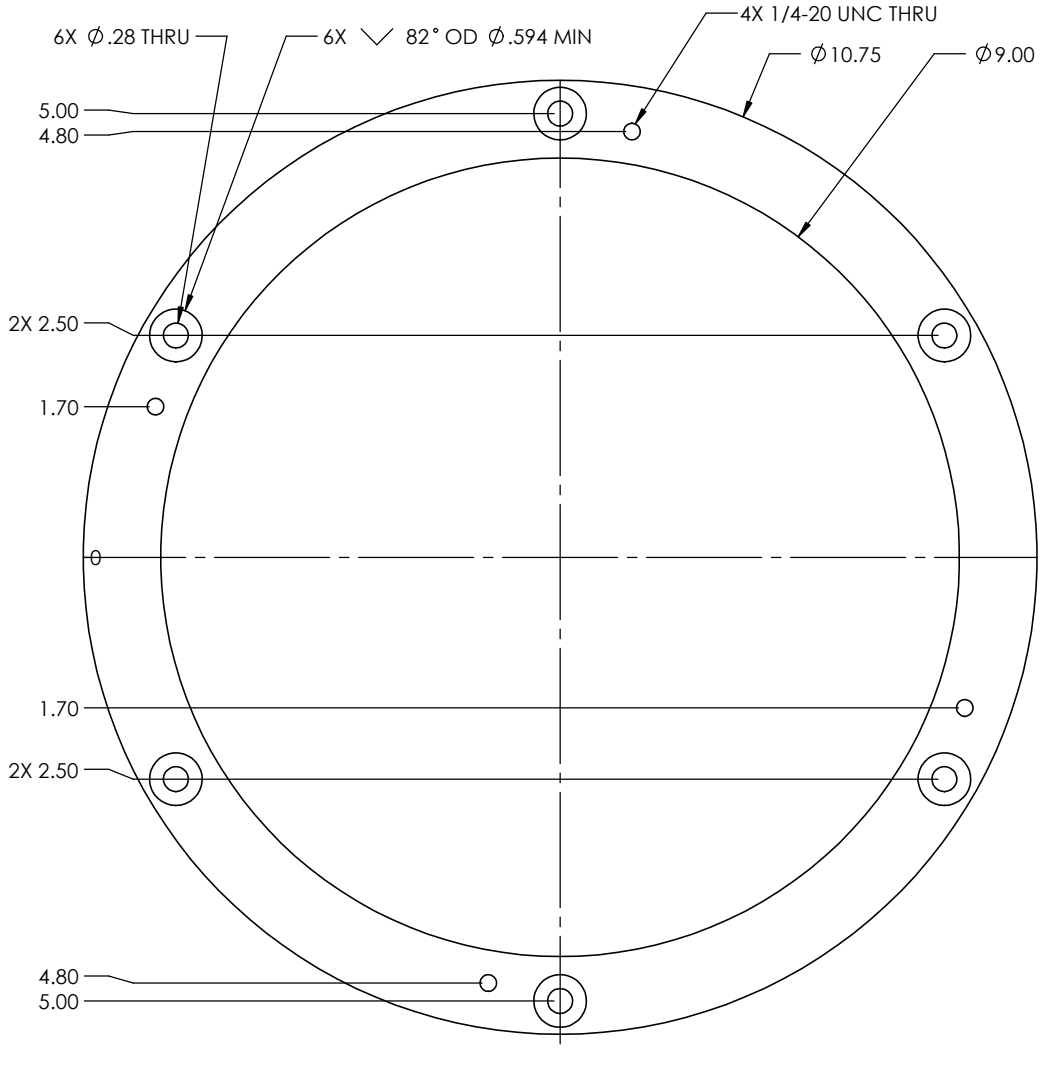

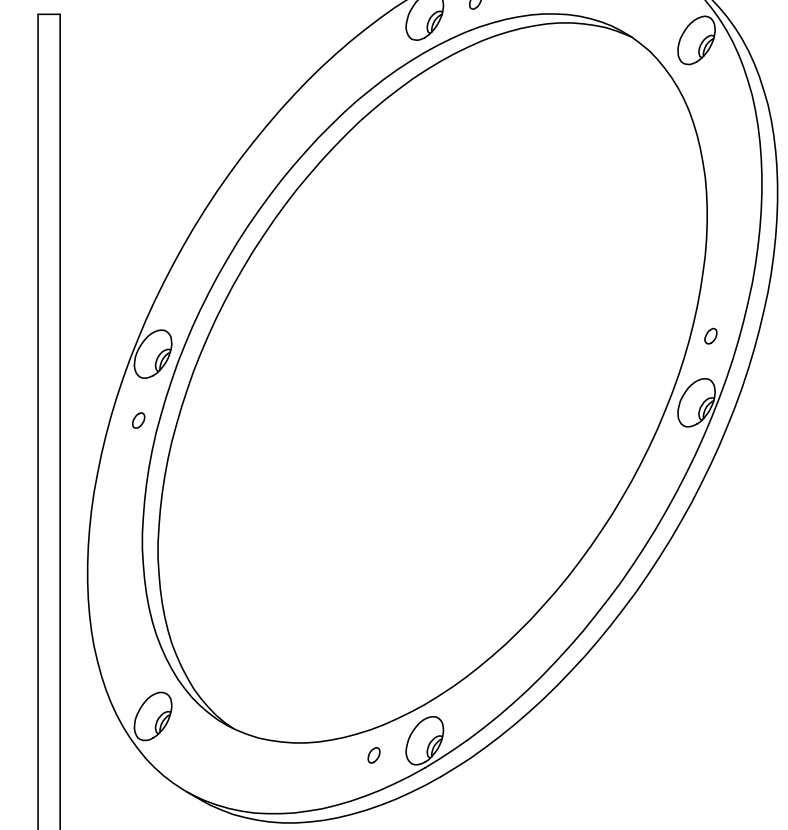

UNLESS OTHERWISE SPECIFIED	APPROVALS	DATE
1 PLACE DIM ±1/16 · 2 PLACE DIM ±.02 · 3 PLACE DIM ±.005 · ANGLES ±1°	DRAWN: JORDAN CARESS	2025-03-25
- DIMENSIONS ARE IN INCHES. - DIMENSION LIMITS HELD AFTER PLATING. - REMOVE BURRS AND SHARP EDGES .015 MAX. - MACHINED FILLET RADII .015-.030. - ⌖ .005 FOR MACHINED DIAMETERS SHARING A ℄ - ⊥ & // OF MACHINED SURFACES .002 PER INCH. MAX .012 INCHES FOR SINGLE SURFACE. - √ ON MACHINED SURFACES - √ ON DRILLED HOLES	CHECKED:	
	PROJECT:	
	MATERIAL: MATERIAL <NOT SPECIFIED>	
	VOLUME: 6.563IN^3	
	WEIGHT: 0.237LB	
DO NOT SCALE DRAWING		

MONTEREY BAY AQUARIUM RESEARCH INSTITUTE
MBARI
7700 SANDHOLDT RD.
MOSS LANDING, CA 95039
PH: (831) 775-1700

100222901_HYPERION_MVC_MOUNTING_PLATE_BOTTOM

SIZE	DWG. NO.	REV.
B	100222901	

SCALE 1:4 SHEET 1 OF 1