THE INFORMATION CONTAINED IN THIS DRAWING IS THE SOLE PROPERTY OF MBARI ANY REPRODUCTION IN PART OR WHOLE WITHOUT THE WRITTEN PERMISSION OF MBARI IS PROHIBITED.

REVISIONS				
ZONE	REV.	DESCRIPTION	DATE	APPROVED

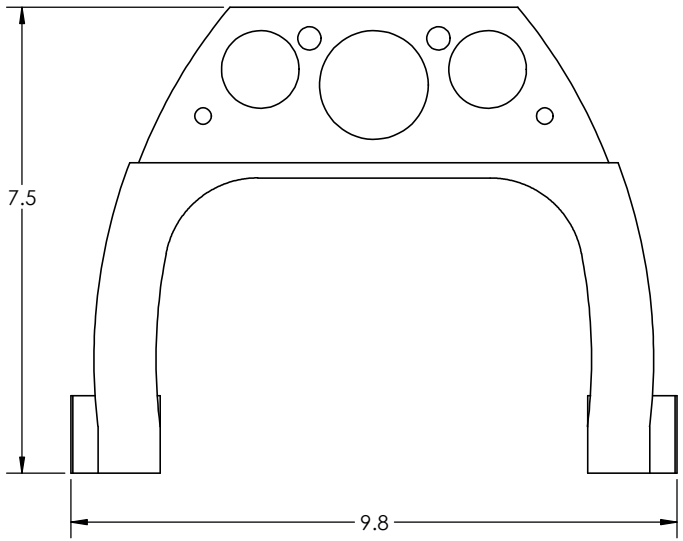

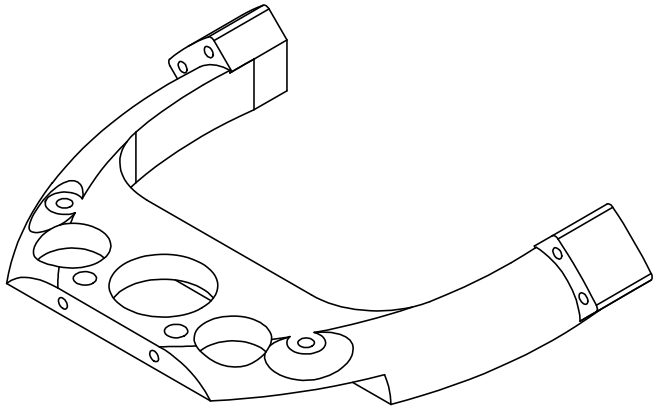

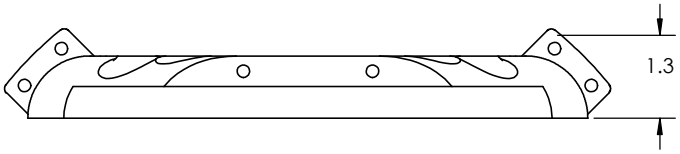

UNLESS OTHERWISE SPECIFIED

1 PLACE DIM ±1/16	2 PLACE DIM ±.02	3 PLACE DIM ±.005	ANGLES ±1°

- DIMENSIONS ARE IN INCHES.
- DIMENSION LIMITS HELD AFTER PLATING.
- REMOVE BURRS AND SHARP EDGES .015 MAX.
- MACHINED FILLET RADII .015-.030.
- ⌖ .005 FOR MACHINED DIAMETERS SHARING A ℄
- ⊥ & // OF MACHINED SURFACES .002 PER INCH. MAX .012 INCHES FOR SINGLE SURFACE.
- √ ON MACHINED SURFACES
- √ ON DRILLED HOLES

DO NOT SCALE DRAWING

APPROVALS	DATE
DRAWN: JORDAN CARESS	11/19/2026
CHECKED:	
PROJECT:	
MATERIAL: 3D PRINTED ABS	
VOLUME: 15.8911IN^3	
WEIGHT: 0.574LB	

MONTEREY BAY AQUARIUM RESEARCH INSTITUTE
MBARI
7700 SANDHOLDT RD.
MOSS LANDING, CA 95039
PH: (831) 775-1700

100222905_HYPERION_MVC_LEGS

SIZE B | DWG. NO. 100222905 | REV.

SCALE 1:2 | SHEET 1 OF 1