ZONE	REV.	REVISIONS DESCRIPTION	DATE	APPROVED

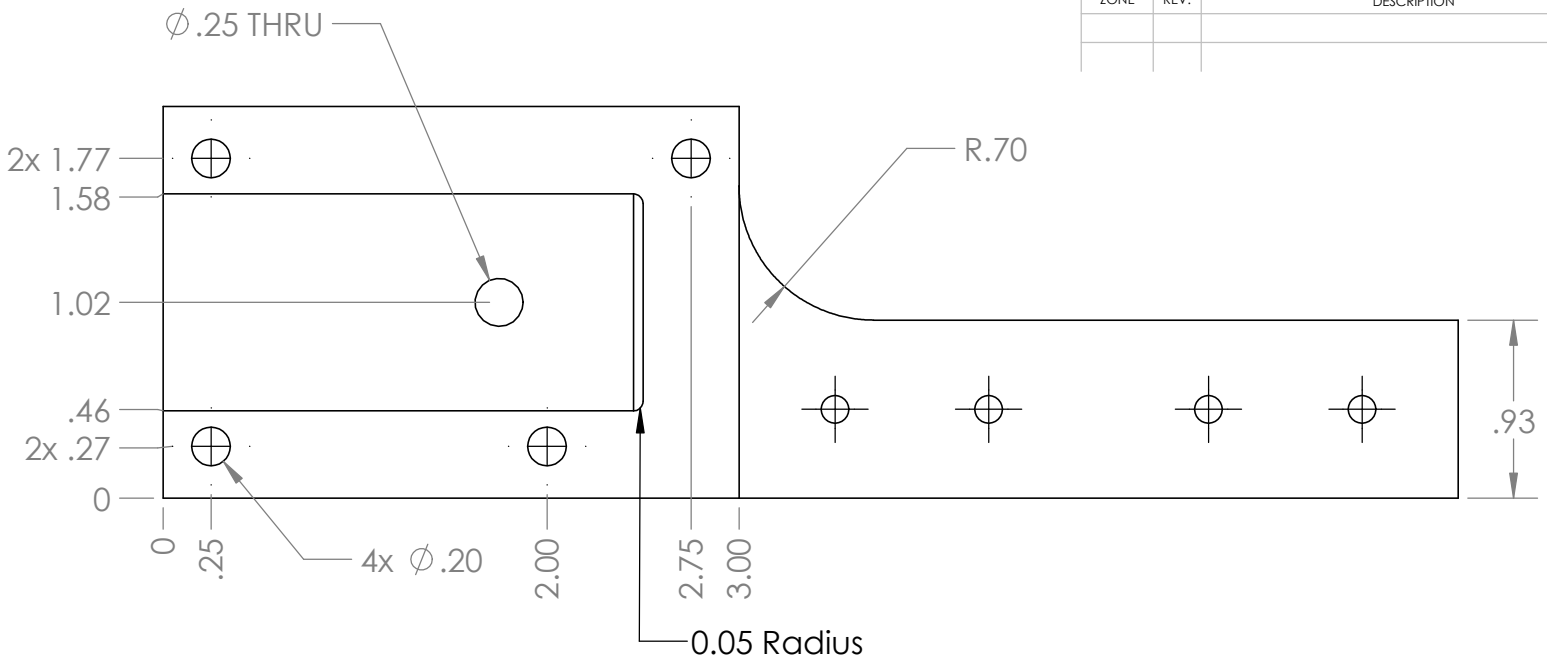

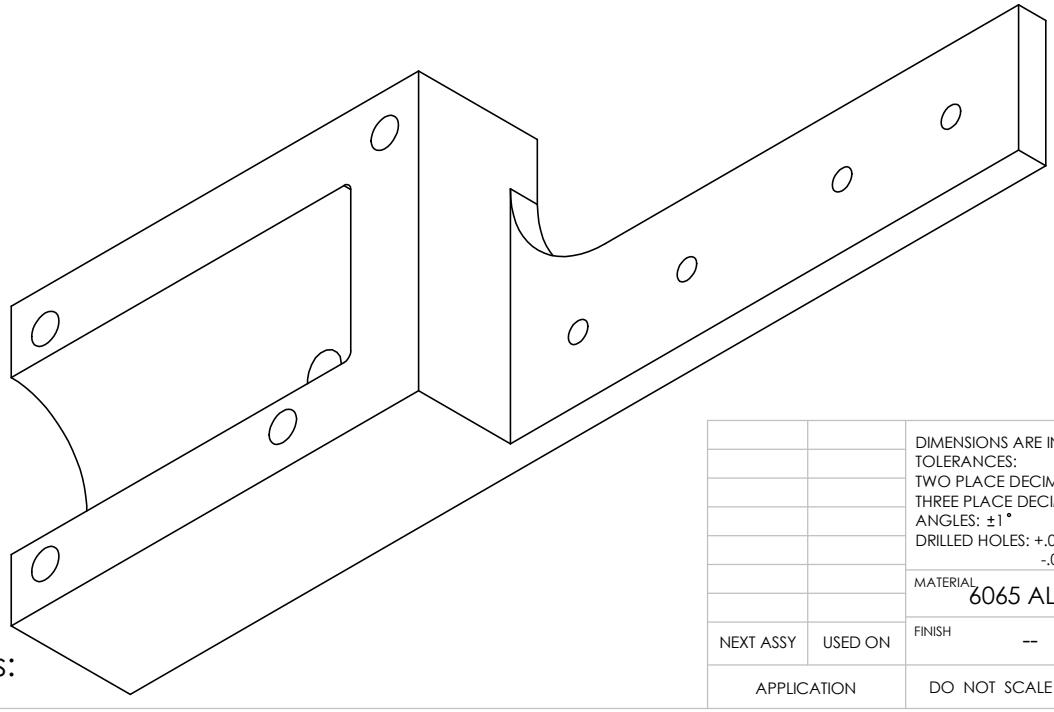

Status:

		DIMENSIONS ARE IN INCHES TOLERANCES: TWO PLACE DECIMAL ±0.02 THREE PLACE DECIMAL ±0.005 ANGLES: ±1° DRILLED HOLES: +.005 -.002	APPROVALS / DATE DRAWN Jordan Caress 2/22/24 CHECKED ENGINEER	**Monterey Bay Aquarium Research Institute** **MBARI** **7700 Sandholdt RD.** **Moss Landing, CA 95039** **PH: (831) 775-1700**
		MATERIAL 6065 ALUMINUM	PROJECT NO. 368000	carabiner_holder_Left_REVB
NEXT ASSY	USED ON	FINISH --	PROJECT DORADO	SIZE A / DWG. NO. / REV. B
APPLICATION		DO NOT SCALE DRAWING	WEIGHT	SCALE:1:2 / WEIGHT: / SHEET 1 OF 2

ZONE	REV.	REVISIONS DESCRIPTION	DATE	APPROVED

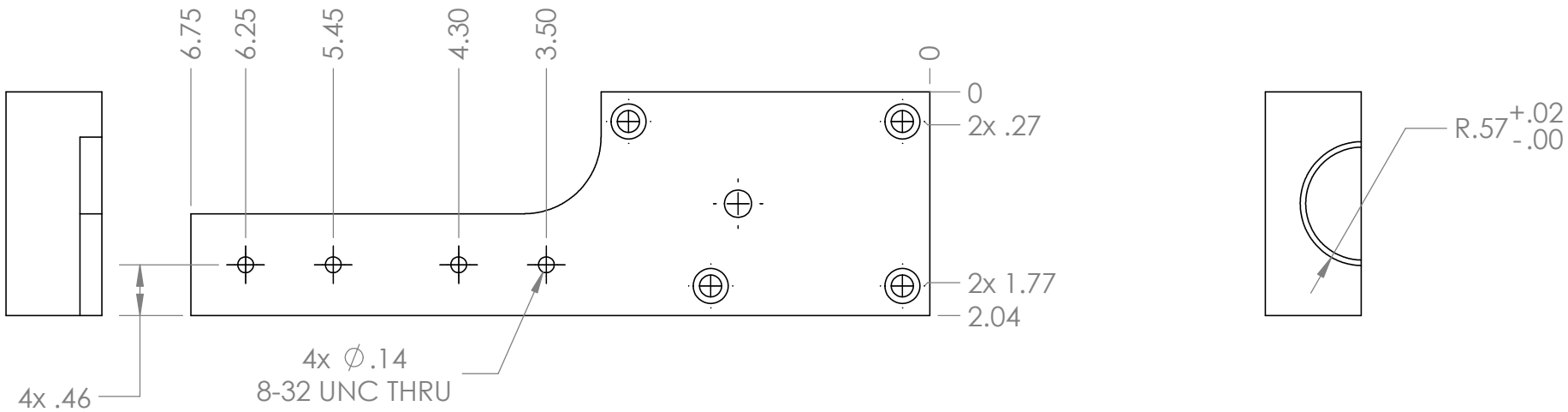

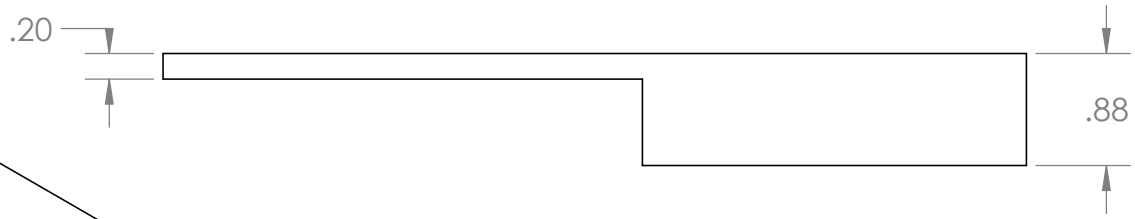

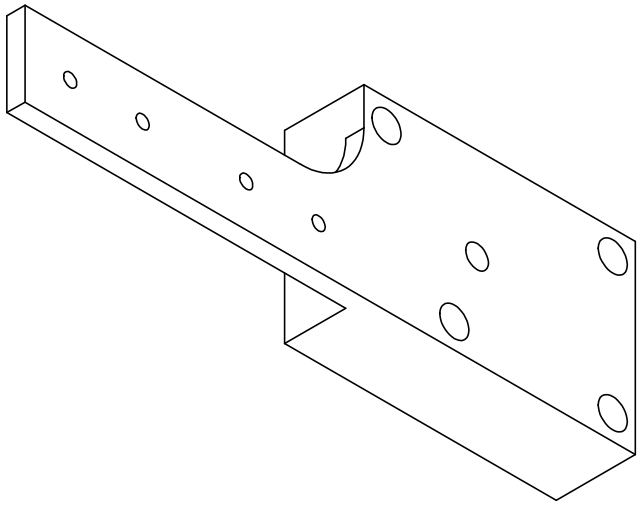

Status:

		DIMENSIONS ARE IN INCHES TOLERANCES: TWO PLACE DECIMAL ±0.02 THREE PLACE DECIMAL ±0.005 ANGLES: ±1° DRILLED HOLES: +.005 -.002	APPROVALS DATE DRAWN Jordan Caress 5/23/22 CHECKED ENGINEER	**Monterey Bay Aquarium Research Institute** **MBARI** **7700 Sandholdt RD.** **Moss Landing, CA 95039** **PH: (831) 775-1700**
		MATERIAL 6065 ALUMINUM	PROJECT NO. 368000	carabiner_holder_Left_REVB
NEXT ASSY	USED ON	FINISH --	PROJECT Dorado	SIZE A · DWG. NO. · REV. B
APPLICATION		DO NOT SCALE DRAWING	WEIGHT	SCALE:1:2 · WEIGHT: · SHEET 2 OF 2