ZONE	REV.	REVISIONS DESCRIPTION	DATE	APPROVED

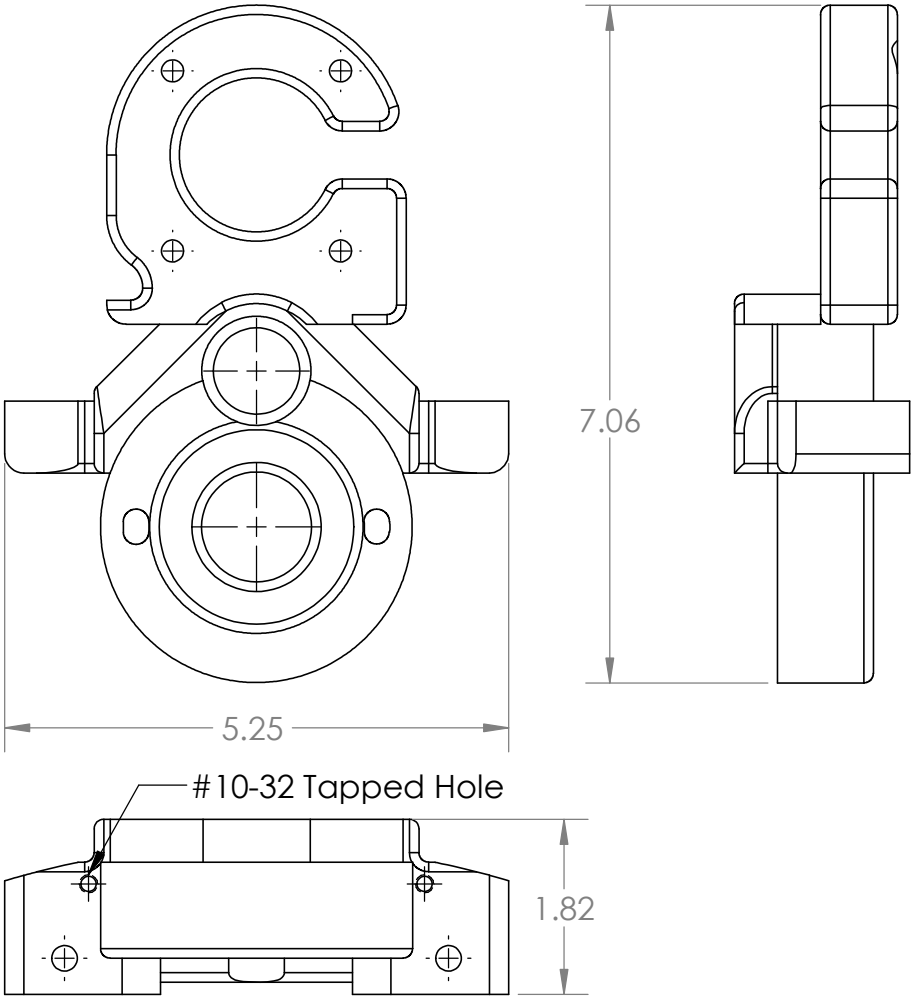

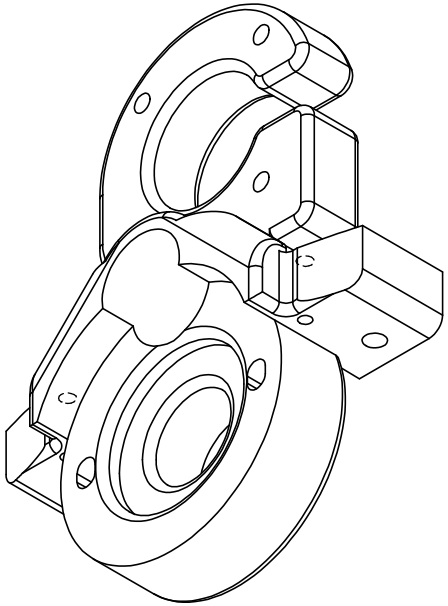

		DIMENSIONS ARE IN INCHES TOLERANCES: TWO PLACE DECIMAL ±0.02 THREE PLACE DECIMAL ±0.005 ANGLES: ±1° DRILLED HOLES: +.005 -.002	APPROVALS DATE DRAWN Jordan Caress 10/2/25 CHECKED ENGINEER	Monterey Bay Aquarium Research Institute **MBARI** **7700 Sandholdt RD.** **Moss Landing, CA 95039** **PH: (831) 775-1700**
		MATERIAL 3D Printed ABS	PROJECT NO. 368000 PROJECT	MOUNT, THREE BEACON
NEXT ASSY	USED ON	FINISH --		SIZE **A** DWG. NO. REV. A
APPLICATION		DO NOT SCALE DRAWING	WEIGHT	SCALE:1:2 WEIGHT: SHEET 1 OF 1

Status: