| ZONE | REV. | REVISIONS DESCRIPTION | DATE | APPROVED |
|---|---|---|---|---|
| | | | | |
| | | | | |

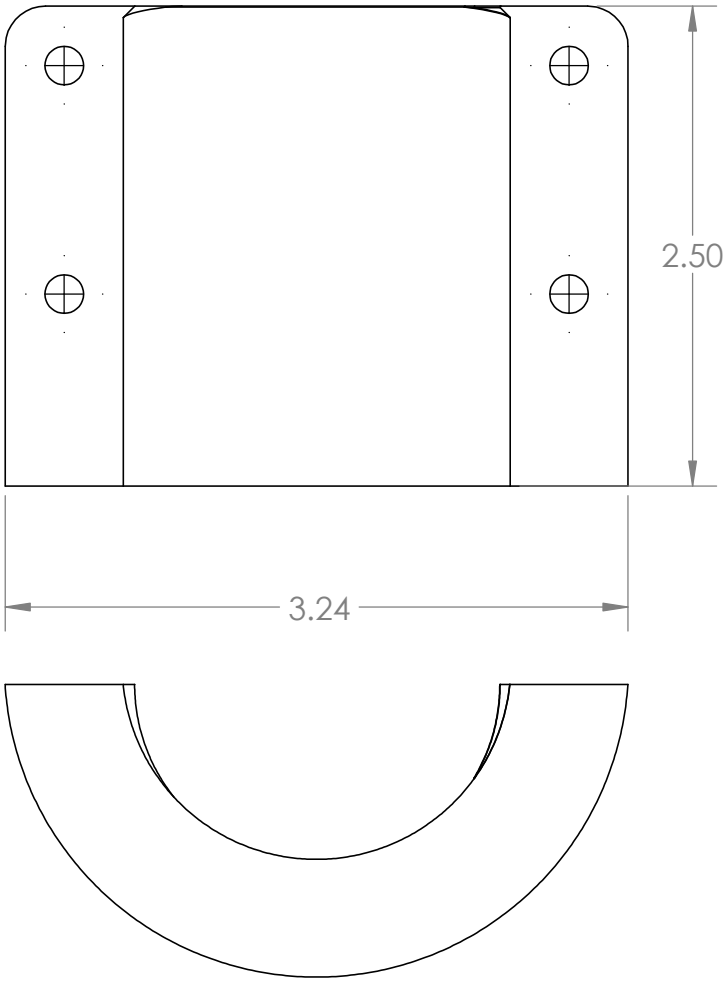


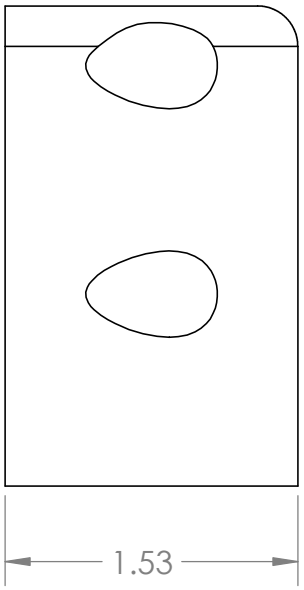


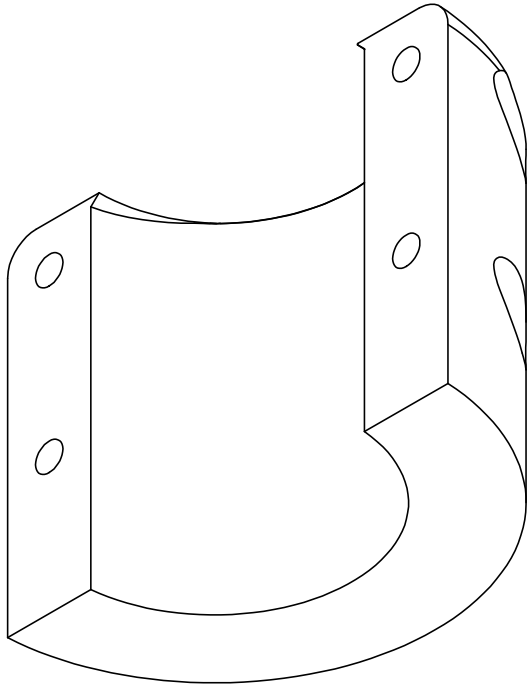

| | | | | |
|---|---|---|---|---|
| | | DIMENSIONS ARE IN INCHES<br>TOLERANCES:<br>TWO PLACE DECIMAL ±0.02<br>THREE PLACE DECIMAL ±0.005<br>ANGLES: ±1°<br>DRILLED HOLES: +.005<br>-.002 | APPROVALS DATE<br>DRAWN Jordan Caress 1/8/24<br>CHECKED<br>ENGINEER | **Monterey Bay Aquarium Research Institute**<br>**MBARI**<br>**7700 Sandholdt RD.**<br>**Moss Landing, CA 95039**<br>**PH: (831) 775-1700** |
| | | MATERIAL 3D Printed ABS | PROJECT NO. 368000<br>PROJECT | apollo_clamp_2 |
| NEXT ASSY | USED ON | FINISH -- | | SIZE **A** DWG. NO. REV. A |
| APPLICATION | | DO NOT SCALE DRAWING | WEIGHT | SCALE:1:1 WEIGHT: SHEET 1 OF 1 |

Status: