ZONE	REV.	REVISIONS DESCRIPTION	DATE	APPROVED

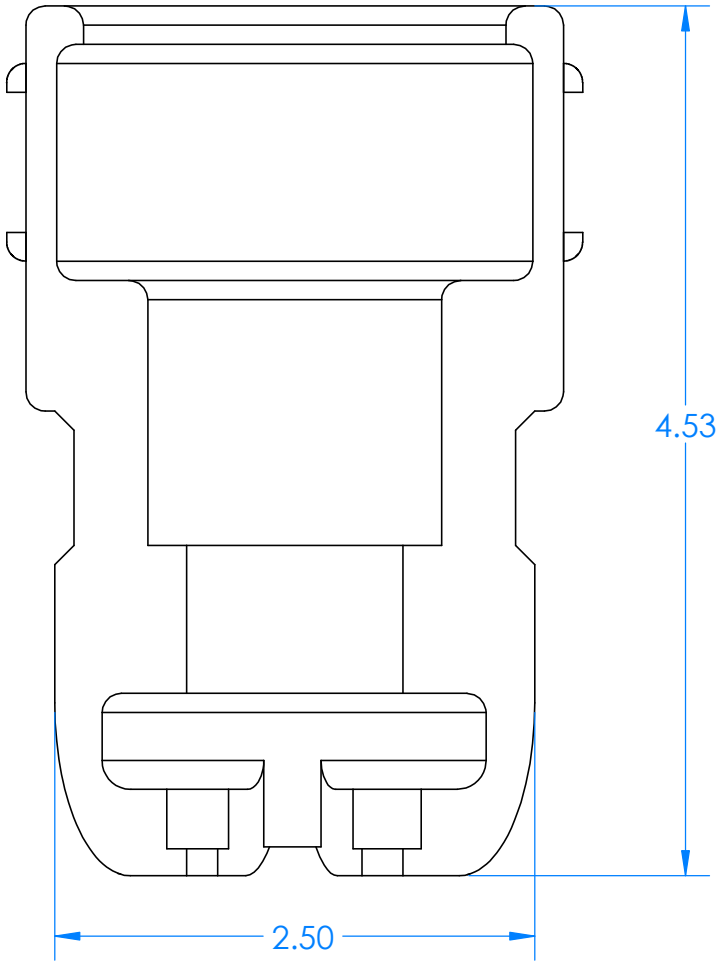

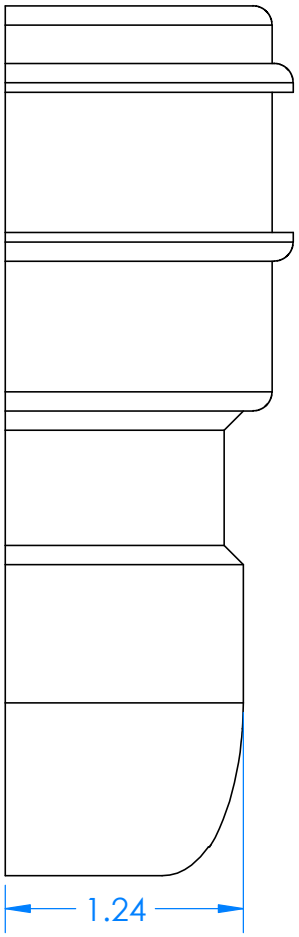

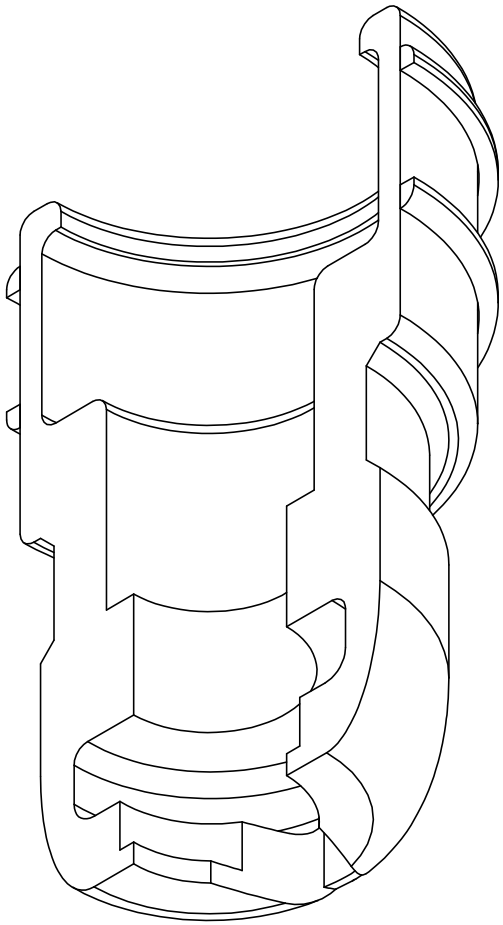

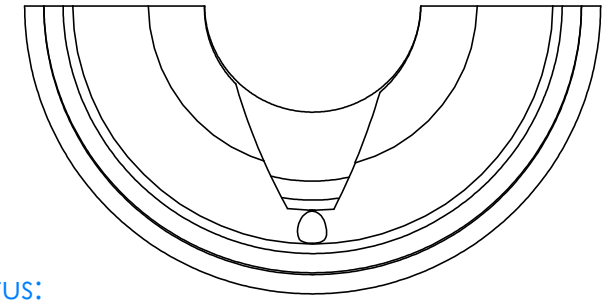

Status:

NEXT ASSY	USED ON	DIMENSIONS ARE IN INCHES TOLERANCES: TWO PLACE DECIMAL ±0.02 THREE PLACE DECIMAL ±0.005 ANGLES: ±1° DRILLED HOLES: +.005 -.002	APPROVALS / DATE DRAWN: Jordan Caress 5/25/22 CHECKED ENGINEER	**Monterey Bay Aquarium Research Institute** **MBARI** **7700 Sandholdt RD.** **Moss Landing, CA 95039** **PH: (831) 775-1700**
		MATERIAL: 3D Printed ABS	PROJECT NO.: 368000	temp_back_cover
		FINISH: --	PROJECT: Dorado	SIZE: A / DWG. NO. / REV.: E
APPLICATION		DO NOT SCALE DRAWING	WEIGHT	SCALE:1:2 / WEIGHT: / SHEET 1 OF 1