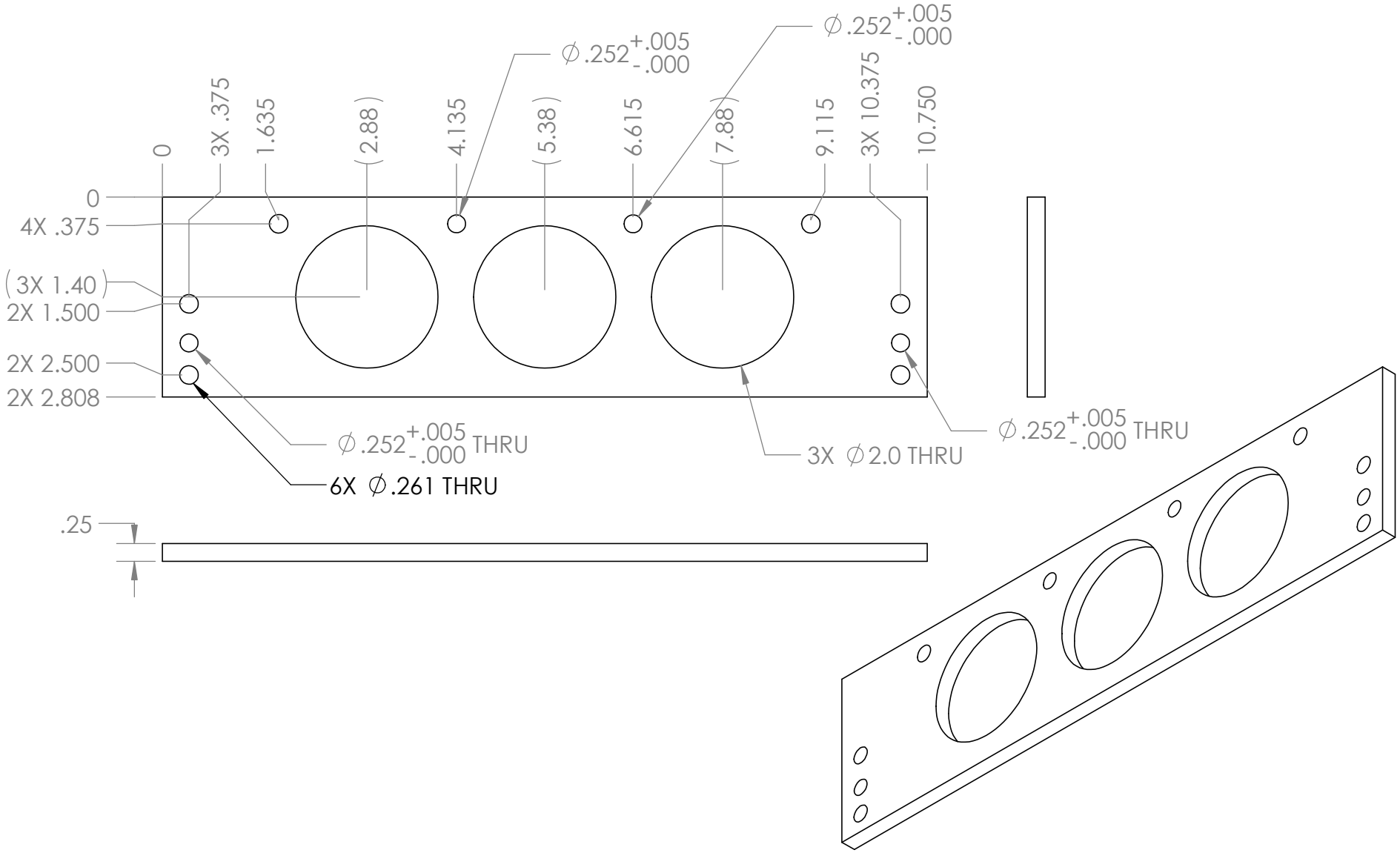

		DIMENSIONS ARE IN INCHES TOLERANCES: TWO PLACE DECIMAL ±0.02 THREE PLACE DECIMAL ±0.005 ANGLES: ±1° DRILLED HOLES: +.005 -.002	APPROVALS DATE DRAWN Jordan Caress 2/10/25 CHECKED ENGINEER	**Monterey Bay Aquarium Research Institute** **MBARI** **7700 Sandholdt RD.** **Moss Landing, CA 95039** **PH: (831) 775-1700**
		MATERIAL 6061 Aluminium	PROJECT NO. 368000 PROJECT	PHINS_RECEIVE_BRACKET_FRONT_REV_D
NEXT ASSY	USED ON	FINISH --		SIZE A DWG. NO. REV. D
APPLICATION		DO NOT SCALE DRAWING	WEIGHT	SCALE:1:2 WEIGHT: SHEET 1 OF 1

Status: