REVISIONS				
ZONE	REV.	DESCRIPTION	DATE	APPROVED

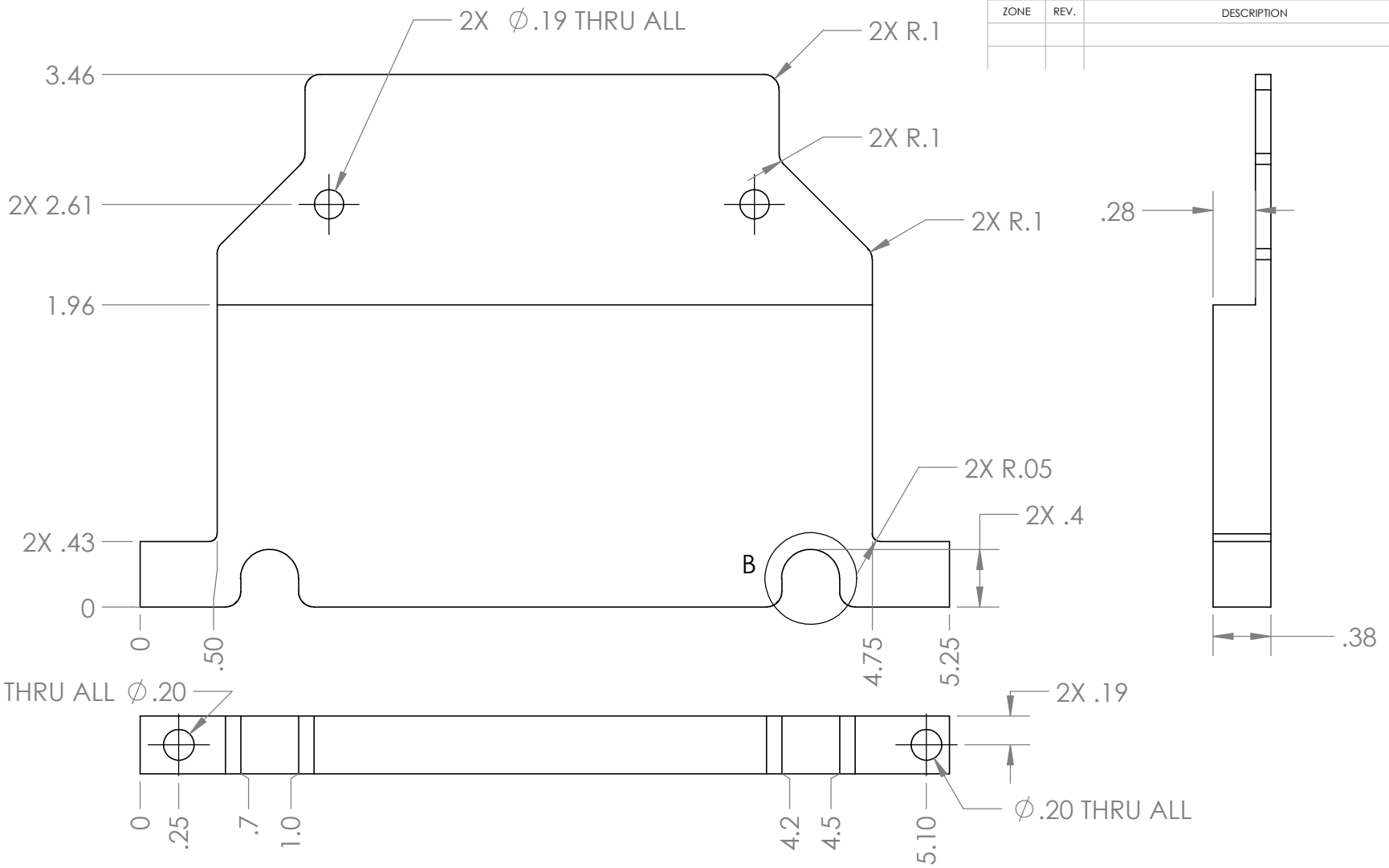

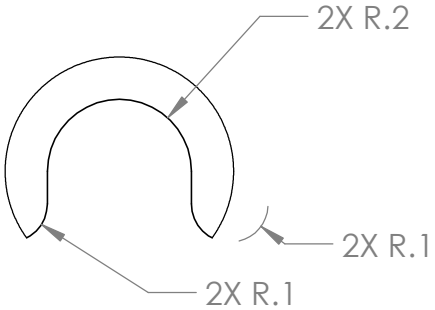

Status: DETAIL B
SCALE 2 : 1

		DIMENSIONS ARE IN INCHES TOLERANCES: TWO PLACE DECIMAL ±0.02 THREE PLACE DECIMAL ±0.005 ANGLES: ±1° DRILLED HOLES: +.005 -.002	APPROVALS DATE DRAWN Jordan Caress 1/6/2026 CHECKED ENGINEER	**Monterey Bay Aquarium Research Institute** **MBARI** **7700 Sandholdt RD.** **Moss Landing, CA 95039** **PH: (831) 775-1700**
		MATERIAL 6061 Aluminum	PROJECT NO. 368000 PROJECT	IRAM_Heatsink_REVB
NEXT ASSY	USED ON	FINISH --		SIZE A · DWG. NO. · REV. B
APPLICATION		DO NOT SCALE DRAWING	WEIGHT	SCALE:1:1 · WEIGHT: · SHEET 1 OF 1