REVISIONS				
ZONE	REV.	DESCRIPTION	DATE	APPROVED

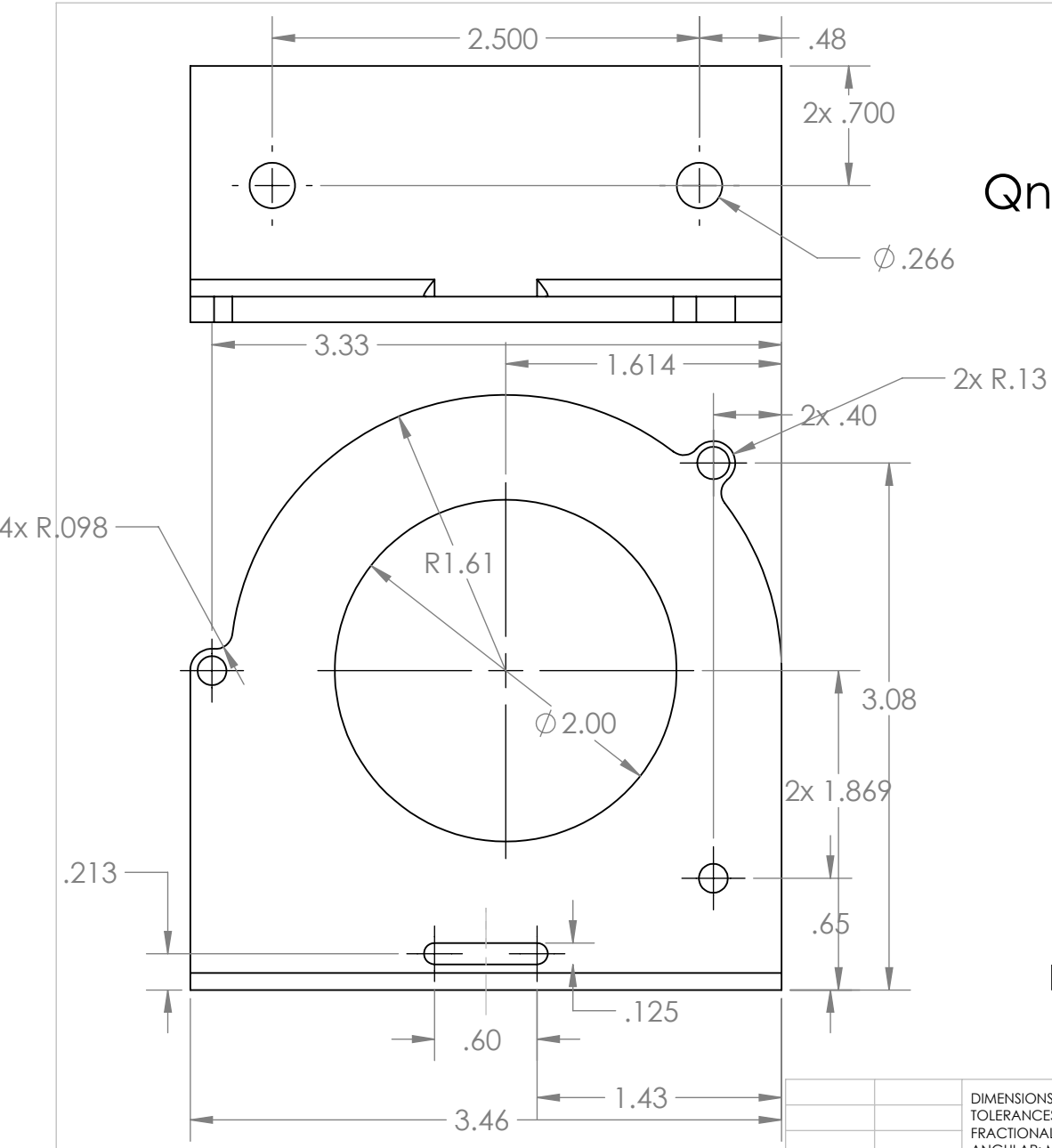

Qnty: 4

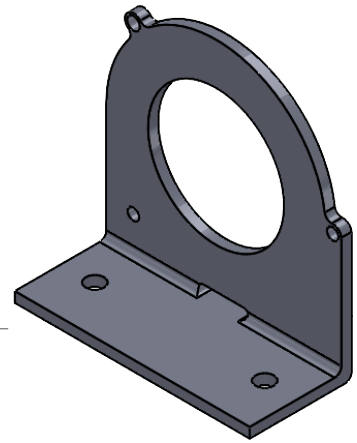

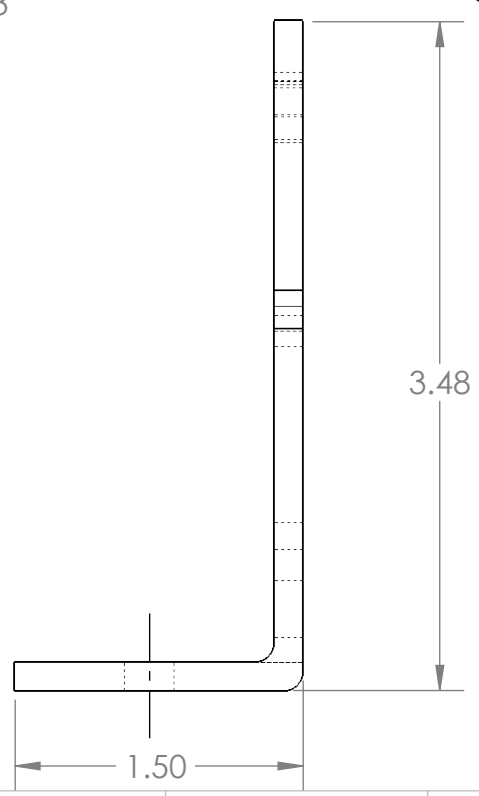

		DIMENSIONS ARE IN INCHES TOLERANCES: FRACTIONAL ± ANGULAR: MACH ± BEND ± TWO PLACE DECIMAL ± THREE PLACE DECIMAL ±	APPROVALS	DATE
			DRAWN	
			CHECKED	
			ENGINEER	
		MATERIAL --	PROJECT NO. XXXXX	
NEXT ASSY	USED ON	FINISH --	PROJECT XXXXXXXXXXX	
APPLICATION		DO NOT SCALE DRAWING		

Monterey Bay Aquarium Research Institute

MBARI
7700 Sandholdt RD.
Moss Landing, CA 95039
PH: (831) 775-1700

Thruster L Bracket
LRAUV

SIZE	DWG. NO.	REV.
A	P-222566-25	
SCALE:1:2	WEIGHT: lb.	SHEET 1 OF 1